stefan0v@yopmail.com

Subject to change without notice

Blockdiagram

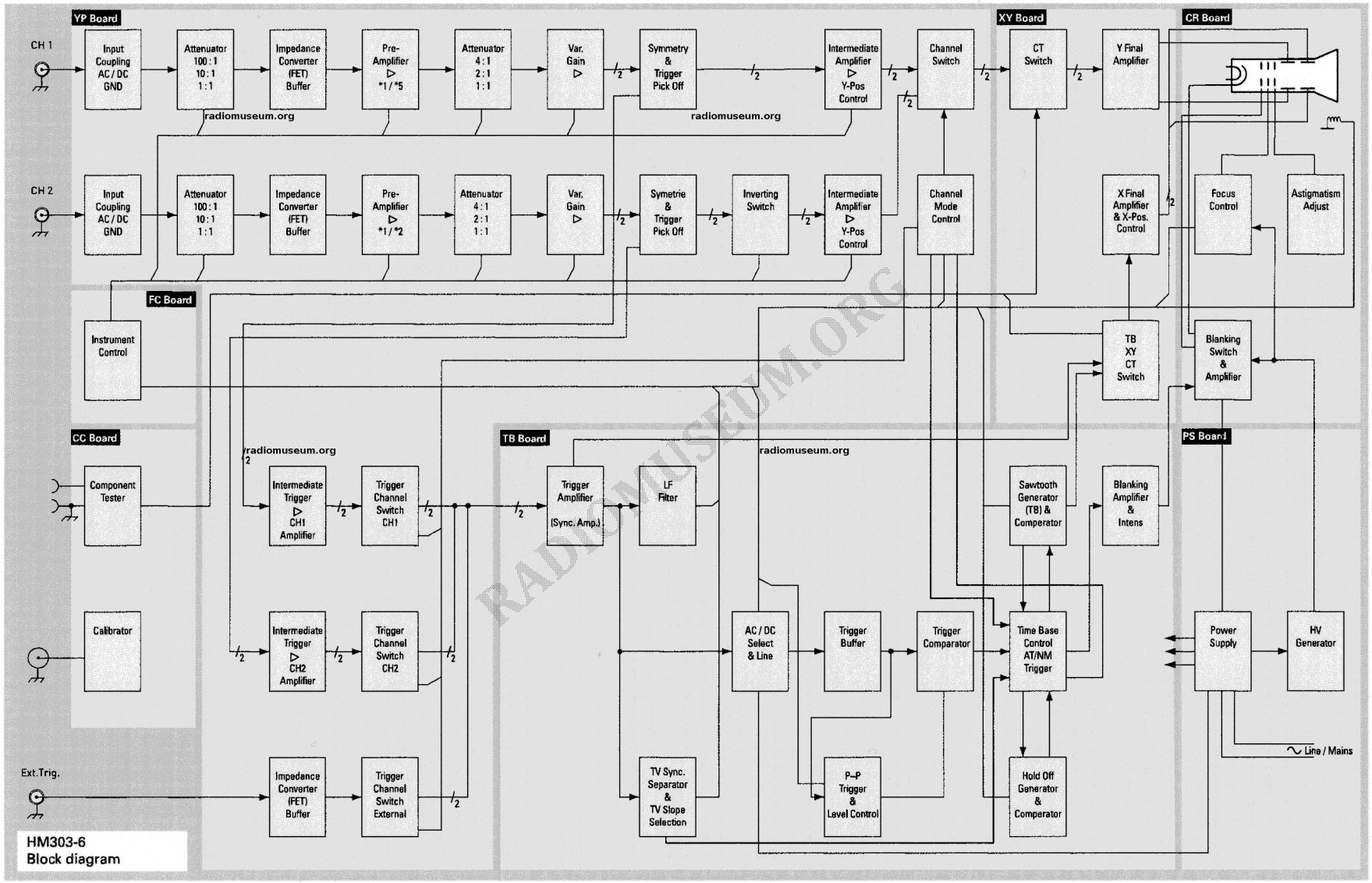

www.radiomuseum.org; upload by Günter Kudicke; download by Stefan Nicolae Sun May 21 11:46:19 CEST 2017 [3200 x 2200, 209kb]