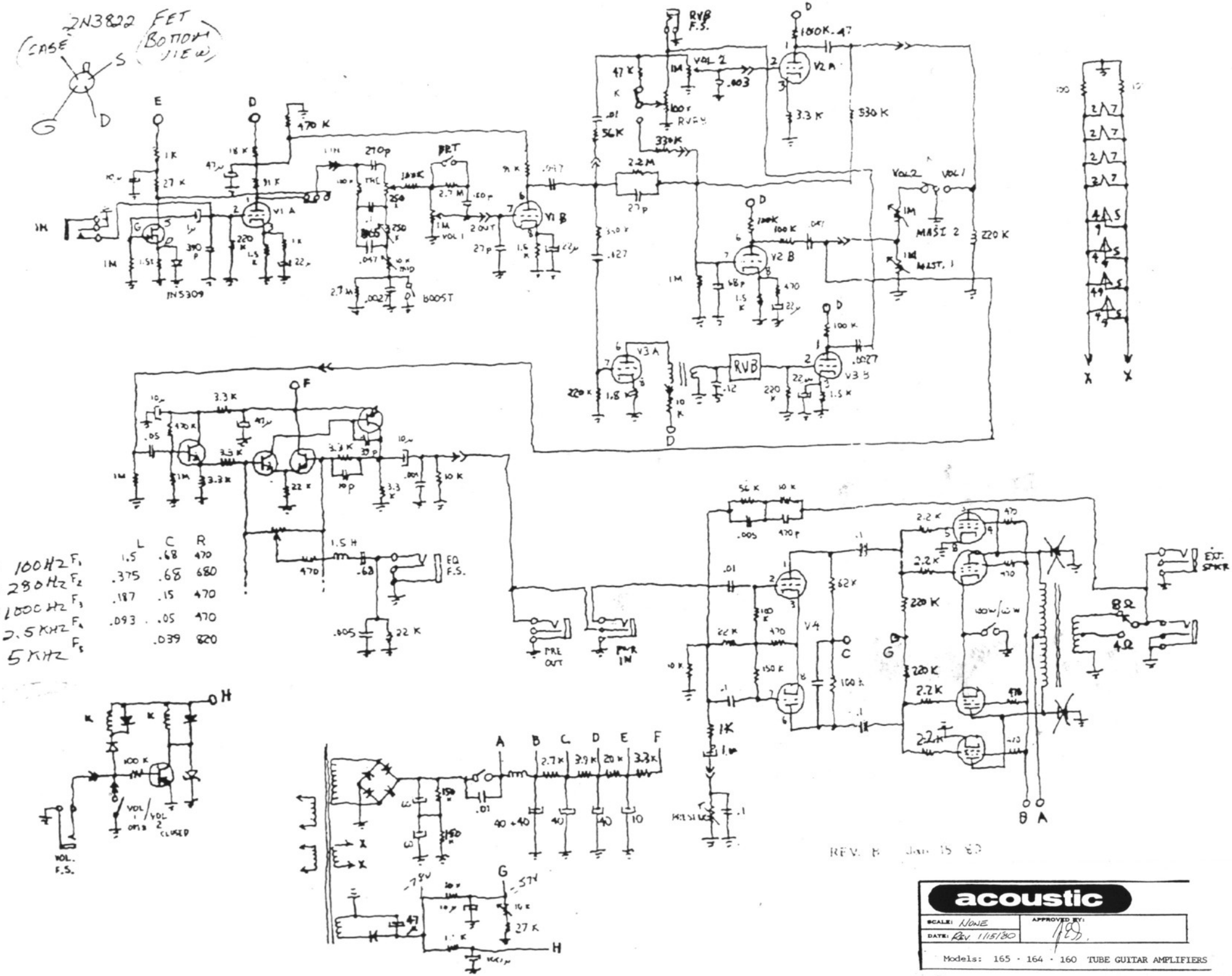

	L	C	R
100Hz F_1	1.5	.68	470
280Hz F_2	.375	.68	680
1000Hz F_3	.187	.15	470
2.5KHz F_4	.093	.05	470
5KHz F_5		.039	820

acoustic

SCALE: NONE

DATE: REV 1/15/80

APPROVED BY: [signature]

Models: 165 · 164 · 160 TUBE GUITAR AMPLIFIERS