BOONTON

INSTRUCTION MANUAL

MODEL 92BD

PROGRAMMABLE RF MILLIVOLTMETER

b-877

INSTRUCTION MANUAL

MODEL 92BD

PROGRAMMABLE RF MILLIVOLTMETER

b-877

b-877

BOONTON ELECTRONICS CORPORATION

TEL: 201-887-5110
TWX: 710-986-8241

ROUTE 287 AT SMITH ROAD
PARSIPPANY, N.J. 07054 USA

TABLE OF CONTENTS

CHAPTER		PAGE
I.	GENERAL INFORMATION	1
1.1	GENERAL	1
1.2	EQUIPMENT DESCRIPTION	2
1.2.1	Wide Frequency Range	3
1.2.2	Wide Voltage Range	3
1.2.3	True RMS Response	
1.2.4	Low Noise	4
1.2.5	Minimal Zero Adjustment	4
1.2.6	BCD Output	4
1.2.7	DC Analog Output	5
II.	SPECIFICATIONS	5
III.	OPERATION	11
3.1	INSTALLATION	11
3.1.1	Operating Controls and Indicators	11
3.2	OPERATING PROCEDURES	12
3.2.1	Initial Operating Procedure	12
3.3	OPERATING NOTES	13
3.3.1	Overload Limits	13
3.3.2	Connection for Measurements Below 100 MHz	13
3.3.3	Connection for Measurements Above 100 MHz	13
3.3.4	Low-Level Measurement	14
3.3.5	Over/Under Range Indication	14
3.3.6	Making the Zero Adjustment	16
3.3.7	Signal Overload on 1 mV Range	16
3.3.8	Temperature Effects	16
3.3.9	Hum, Noise, and Spurious Pickup	17
3.4	LINEAR DC OUTPUT	17
3.5	LOW-FREQUENCY MEASUREMENTS	17

TABLE OF CONTENTS (CONTINUED)

CHAPTER		PAGE
3.6	CORRECTION CURVES FOR ACTUAL VOLTAGE vs. DC OUTPUT	17
3.7	CORRECTION CURVE FOR MODEL 91-8B	17
3.8	CORRECTION CURVE FOR MODEL 91-14A	17
IV.	THEORY	20
4.1	GENERAL	20
4.1.1	RF Probe	20
4.1.2	Attenuator and Amplifiers	21
4.1.3	Synchronous Detector	21
4.1.4	Shaping Amplifier	22
4.1.5	Digital Control	22
4.1.6	Analog/Digital Converter	22
4.1.7	Chopper-Driver Circuits	22
4.1.8	Power Supply	23
4.1.9	Programming	23
V.	MAINTENANCE	23
5.1	PERIODIC CALIBRATION	23
5.2	PRECAUTIONS WHEN CHECKING CALIBRATION	24
5.3	CALIBRATION CHECK	24
5.4	CALIBRATION PROCEDURE	24
5.5	TROUBLESHOOTING PROCEDURE	27
5.5.1	Cover Removal	27
5.5.2	Chopper Replacement	27
5.5.3	Voltage and Resistance Tests	27
5.5.4	Test Points	27
5.5.5	Replacement of RF Probes	27
5.5.6	Probe Tests	27

TABLE OF CONTENTS (CONTINUED)

CHAPTER	PAGE
VI. INTERFACE INFORMATION	34
6.1 PROGRAMMING INPUTS	
6.1.1 Input Characteristics	34
6.1.2 Input Pull-Up	35
6.1.3 Triggering	35
6.2 DATA OUTPUTS	35
6.2.1 Output Characteristics	36
6.2.2 Analog Output	36
6.3 WAVEFORMS	36
6.3.1 Encode Trigger	36
6.3.2 Data Output Timing	37
6.4 AUTORANGING CHARACTERISTICS	38
SCHEMATICS	Endpapers
Amplifier	830581 Sheet 1 of 3
Chopper Driver	830581 Sheet 3 of 3
Shaping Amplifier	830456 Sheet 3 of 3
Autorange	830483
Digital Control	830581 Sheet 2 of 3
Counter Board	830546 Sheet 1 of 3
A/D Converter	830546 Sheet 3 of 3
Display Board	830546 Sheet 2 of 3
92-8A	830650
92-9A	830900

CHARTS AND DRAWINGS

FIGURE		PAGE
1	Input Resistance of RF Probe as a Function of Input Level and Frequency	9
2	Input Capacitance vs. Input Level of Model 91-12F Probe (Measured at 10 MHz)	10
3	Typical VSWR of Model 91-12F RF Probe with Model 92-8B 50 Ω Adapter	10
4	Typical VSWR of Model 91-12F RF Probe with Model 91-14A Type N Tee Adapter and 91-15A 50 Ω Termination	10

CHARTS AND DRAWINGS (CONTINUED)

FIGURE		PAGE
5	Method for making low-inductance connections to test signal point directly using the RF probe	15
6	Assembly of Model 91-14A Type N Tee Adapter	15
7	Down-Scale Correction Curves, Recorder Output	18
8A	Model 91-8B 50 Ω Adapter Correction Curve	19
8B	Model 91-14A Type N Tee Adapter Correction Curve	19
9	Model 92BD Block Diagram	20
10	Frequency Response Test Setup	30
11	Swept Frequency Response Test Setup	31
12	Calibration Instructions	33
13	External Connections	38

TABLES

TABLE NO.		PAGE
1	Required Accessories	8
2	Crest Factors	9
3	Model 92 Series Controls and Indicators	11
4	Connection Recommendations	14

TABLE OF REPLACEABLE PARTS 39

I. GENERAL INFORMATION

1.1 GENERAL

One of the Model 92 Series of RF Millivoltmeters, the Model 92BD provides digital readout of measurements from the low radio frequencies to the gigahertz region, over a voltage range of 200 μV to 3 volts. It is a programmable, solid-state instrument of high sensitivity and accuracy.

The Model 92BD exhibits true rms response for input signals up to 30 millivolts, gradually approaching peak-to-peak above this level. The digital voltmeter, however, is calibrated in rms above this region.

The instrument is characterized by high input impedance (see Figures 1 and 2), excellent stability, and low noise. A small edgewise panel meter, calibrated in dBm, is included; this is necessary for zeroing the instrument (the digital display blanks out below 200 μV), and will also serve for comparative measurements of acceptable accuracy.

A binary coded decimal (BCD) output is provided at a rear connector, permitting the 92BD to be integrated in systems for driving printers, tape or card punches, data control units, and similar interfacing data equipment. As part of a system, the 92BD is also programmed and controlled externally as needed.

A linear dc output, whose level is proportional to the rf input voltage, is also provided at a rear connector. This may be used to drive a recorder, remote indicator, or other analog devices.

The 92BD offers a convenient and accurate means for making a wide variety of measurements. Typical uses of this instrument would include:

In transistor testing the instrument may be used to measure β, f_t, and other transistor parameters.

VSWR and return loss measurements using the Model 92 Series with bridge methods, directional couplers, and adjustable or slotted lines.

Gain and loss measurements in wide-band amplifiers, including such design characteristics as stage gain, flatness of the pass band, upper cutoff or corner frequency, negative feedback factors, and other parameters.

Proper adjustment of tuned circuits in narrow-band amplifiers.

The adjustment, measurement of performance, and evaluation of parameters of rf filters.

Measurement of vswr or return loss and attenuation of rf attenuators.

Measurement of output levels of signal generators, adjustment of baluns, harmonic distortion of rf signals, and adjustment of circuits for minimum voltage (null) or maximum voltage (peak).

The Model 92BD is available in several optional configurations with a basic accuracy of 1% rdg. + 1% fs. The standard features of the instrument are:

Programmable (logic level).

Measures from 200 μV to 3 V* from 10 kHz to 1.2 GHz.

True rms response to 30 mV**.

Convenient push-button ranging.

BCD digital output plus dc analog output.

High input resistance, low input capacitance.

Overload protection to 400 Vdc, 10 Vac.

VSWR less than 1.15 up to 1.2 GHz.

*To 300 V, up to 700 MHz, with accessory 100:1 divider.
**To 3 V, up to 700 MHz, with accessory 100:1 divider.

The characteristics of the instrument include: high reliability, fast warm-up (1 minute), long intervals between calibrations, plug-in PC boards for ease in servicing, light weight, and other advantages of solid-state design.

1.2 EQUIPMENT DESCRIPTION

The Model 92BD is basically a programmable analog instrument with digital readout. It is available with a full range of options and accessories as described in Chapter II. Input range programming by logic level command is standard.

The instrument is sensitive, accurate, sturdily constructed, and protected against overloads. It will perform over extended periods of time without failure or need for recalibration. It is

packaged as a compact bench instrument that can be easily mounted in a standard 19-inch rack using an inexpensive hardware kit.

Important input and accuracy specifications are reproduced on a reference plate fastened to the exterior top cover of the instrument. Clips for holding out-of-use accessories are provided at the rear of the instrument. Calibration instructions are reproduced on the underside of the top cover of the instrument.

Standard accessories supplied with the Model 92 Series include one each of the following:

Model 91-12F RF Probe with low-noise cable and connector.

Model 92-8B 50-ohm BNC adapter.

Model 91-13B Probe Tip (removable) with grounding clip lead.

A complete kit of probe accessories is available as optional equipment, including a storage case with space for the Model 91-12F RF Probe and the other standard accessories.

1.2.1 Wide Frequency Range

The calibrated frequency range of the Model 92BD extends from 10 kHz to 1.2 GHz, with uncalibrated response to beyond 8 GHz. Relative accuracy above 1.2 GHz is typically ±0.5 dB.

A Model 91-8B 50-ohm BNC Adapter is supplied as a standard accessory with the instrument for 50-ohm voltage measurements up to 600 MHz. A correction curve (Figure 8A) is included for frequencies above 50 MHz. For higher frequency measurements and for through-line voltage measurements the optional accessory, Model 91-14A Tee Adapter, is recommended. It is designed to compensate for the rf probe capacitance and to present a good vswr (better than 1.15) up to 1.2 GHz. It may be used in conjunction with the Model 91-15A 50-ohm load for terminated voltage measurements. In a coaxial line its insertion loss is low; however, a chart (Figure 8B) is supplied showing loss vs. frequency. See Figure 4 for typical vswr.

An optional accessory, the Model 91-4C RF Probe, has a frequency range of 1 kHz to 250 MHz for lower frequency applications.

1.2.2 Wide Voltage Range

The Model 92BD has eight ranges, from 1 millivolt full scale to 3 volts full scale, arranged in 1-3-10 sequence. No attenuator attachments are required for measurements up to 3 volts. While this range is ample for most rf voltage measurements, the capability of the instrument can be increased to 300 volts (up to 700 MHz) by using the optional accessory, Model 91-7C 100:1 Voltage

Divider. Use of the 100:1 Voltage Divider also increases the input resistance of the Model 91-4C RF Probe by a factor greater than 100.

1.2.3 True RMS Response

The Model 92BD provides true rms response for signal inputs below approximately 30 millivolts (below 3 volts, up to 700 MHz, with the Model 91-7C 100:1 Voltage Divider). As the input level increases, the waveform response gradually approaches peak-to-peak, calibrated on the indicator in rms. Thus, in addition to making precise sinusoidal voltage measurements at all levels, the instrument measures non-sinusoidal or asymmetrical signals within the rms region without loss of accuracy.

1.2.4 Low Noise

The Model 92BD has been designed and constructed to hold noise from all sources to a minimum.

The probe cable is of special low-noise design; a vigorous flexing causes only momentary, minor deflections on the most sensitive range. The Model 91-12F Probe is not sensitive to shock or vibration; even sharp tapping on the probe barrel causes no visible deflection on any range.

Amplification takes place at 94 Hz, reducing susceptibility to any 50 or 60 Hz line-frequency-related fields. A unique circuit reduces the low-level noise originating from the mechanical chopper and renders the instrument immune to changes in chopper performance that could occur with the passage of time.

1.2.5 Minimal Zero Adjustment

Zero adjustment is not required on the upper five ranges of the Model 92BD. For measurements on the lower three ranges, the ZERO control is set on the most sensitive range before operation. This control balances out small thermal voltages in the probe elements and, once adjusted, requires only infrequent checking during the course of subsequent measurements.

1.2.6 BCD Output

The Model 92BD provides a serialized binary coded decimal output (4-line, 8, 4, 2, 1) for connection to an external system. When the 92BD is an integral part of a system configuration, it may be remotely controlled and triggered automatically in synchronism with some system event.

For systems or external requirements, all input and output connections for the 92BD are made at the card-edge connector on the rear of the instrument. See Figure 11 for receptacle connections.

1.2.7 DC Analog Output

The 92BD also provides a linear dc output whose current capability of 1 mA into 1000 ohms is extremely stable.

II. SPECIFICATIONS

Voltage Range: 200 µV to 3 V (300 V up to 700 MHz with accessory 100:1 voltage divider).

Full Scale Voltage Range: 1, 3, 10, 30, 100, 300, 1000, and 3000 mV.

dBm Range: -60 to +23 dBm (+63 dBm up to 700 MHz with option accessory, Model 91-7C 100:1 Voltage Divider).

Frequency Range: 10 kHz to 1.2 GHz (uncalibrated response to approximately 8 GHz).

Accuracy: 1 mV to 3 V

<table>
<tr><td></td><td colspan="4">1% fs plus</td></tr>
<tr><td>300 mV to 3 V</td><td>1% rdg.</td><td rowspan="2">1% rdg.</td><td rowspan="2">3% rdg.</td><td>10% rdg.</td></tr>
<tr><td>100 µV to 300 mV*</td><td>2% rdg.</td><td>7% rdg.</td></tr>
<tr><td></td><td>10 kHz</td><td>50 kHz</td><td>150 MHz</td><td>700 MHz</td><td>1.2 GHz</td></tr>
</table>

*Below 1 mV, add 1% fs

Indicators:

Digital: LED, 4 digits, f.s. counts of 3000 and 1000. Full 4-digit display with dB option, 0.01 dB resolution. Blanked at 5% over and below 20% f.s.; decimal point, units, and polarity for dBm.

Analog: Miniature edgewise type, calibrated -9 to +3 dBm, 50 Ω.

Power: 115 or 230 V ±10%, 50 to 400 Hz.

RFI: There is no detectable radiated or conducted leakage from instrument or probe.

Temperature: In accordance with ANSI (ASA) Spec. 39.7.

Temperature Range	Temperature Influence	
	Instrument	RF Probe
Ref. 21°C to 25°C	0	0
Normal, 18°C to 30°C	0	±1% rdg
Severe, 10°C to 40°C	±1% rdg	±4% rdg

Waveform Response: True rms response for input levels up to 30 mV (3 V to 700 MHz with 100:1 Voltage Divider), with transition to peak-to-peak (calibrated in rms at higher levels).

Crest Factor: 420 to 1.4 depending upon input level (see Table 2).

Input Impedance: See Figures 1 and 2.

VSWR: Less than 1.20 to 1.2 GHz (Return Loss greater than 21 dB). See Figures 3 and 4.

Power Sensitivity: 200 pW, minimum detectable power in 50 ohms.

Data Outputs: 1-2-4-8 BCD data, serial by digits. 1-2-4 range information. Overrange, underrange, encode complete. Logic 0, 0.7 V; logic 1, 2.4 to 5.25 V.

Commands: Logic-level inputs select input ranges, mV, dBm, and autoranges (with options), encode hold, encode trigger, manual disable, TTL compatible. Logic 0 = 0.7 V; logic 1, 2.4 to 5.25 V.

Analog Output: 0 to 10 Vdc, proportional to rf input voltage. 9 kΩ source resistance.

Dimensions: 5.2" H, 8.3" W, 11.5" D (132 x 211 x 292 mm).

Weight: Net 9 lbs. 3 oz. (4.1 kg) (with standard accessories).

Accessories Furnished: Model 91-12F, RF Probe. RF Probe with low-noise cable and connector assembly for measurements from 10 kHz to 1.2 GHz; see Figures 1 and 2 for input resistance and capacitance.

Model 91-13B, Probe Tip. Removable Probe Tip with grounding clip lead; for use up to approximately 100 MHz.

Model 91-8B, 50 Ω BNC Adapter. Used for measurements up to 600 MHz with a 50-ohm system; for VSWR see curve of Figure 3.

Accessory Kit (Optional)
Model 91-24A:

Model 91-6C, Unterminated BNC Adapter. Used for coaxial connection up to approximately 100 MHz, or to 400 MHz when fed from a 50-ohm source in an electrically short system.

Model 91-7C, 100:1 Voltage Divider. Attenuates input signal by a factor of 100 (±1% plus ±1%/100 MHz), permitting measurements up to 300 volts and extending the rms measuring range to 3 volts; increases input resistance by a factor of 100; operates from 50 kHz to 700 MHz. Maximum input potential, 1000 volts, dc plus peak ac.

Model 91-14A, 50 Ω Tee Adapter. Type N Tee Connector; with Model 91-15A Termination (see below) permits connecting into 50-ohm line; required for measurements above approximately 100 MHz; for VSWR see curve of Figure 4.

Model 91-15A, 50 Ω Termination. Type N 50-ohm termination for use with Model 91-14A Tee Connector.

Model 91-18A, Storage Case. Case for protecting and storing Model 92B accessories.

Other Accessories (Optional)
Available:

Model 91-4C, Special 1 kHz to 250 MHz RF Probe. Low-frequency probe for measurements ranging from 1 kHz to 250 MHz; input resistance essentially the same as that of Model 91-12F, RF Probe.

Model 91-16A, Unterminated Type N Adapter. May be used with all probes. Used for coaxial connection up to approximately 100 MHz, or to 400 MHz when fed from a 50-ohm source in an electrically short system.

Model 92-1A, Single Rack Mounting Kit. Kit for mounting one 92BD as one-half of a module in a standard 19-inch rack.

Model 92-1B, Double Rack Mounting Kit. Kit for mounting two 92BD's side-by-side in a standard 19-inch rack.

Standard Equipment Options:

Model 92BD-01. Autoranging option; provides for automatic range-switching controlled by the level of the input voltage.

Model 92BD-08. Rear Probe connection.

Model 92BD-09. dBm and mV readout.

Model 92BD-10. 75 Ω dBm display; with 91-8B/1 75 Ω BNC adapter.

Model 92BD-16. Serial to parallel data output converter.

NOTE: Special equipment options can be supplied to customer's specifications.

IMPORTANT NOTE: To fully exploit the capabilities of this instrument, the accessories listed below are required for the indicated ranges of operation.

Table 1. Required Accessories

MEASURING RANGE	REQUIRED ACCESSORY	REMARKS
100 MHz to 600 MHz	Model 91-8B 50 Ω Adapter for shielded connection to 50-ohm line; other impedances available on request.	Supplied as standard equipment with the Model 92 Series.
Above 600 MHz	Model 91-14A Tee Connector and 91-15A 50 Ω Termination for connection into 50-ohm line.	Available separately.
1 kHz to 250 kHz	Model 91-4C RF Probe	Available separately.
Input levels up to 300 V; rms response with levels to 3 V	Model 91-7C 100:1 Voltage Divider; operates over frequency range from 50 kHz to 700 MHz	Available separately.

Table 2. Crest Factors

VOLTAGE RANGES (mV) AND CREST FACTORS								
VOLTAGE RANGES (mV)	1	3	10	30	100*	300*	1000*	3000*
CREST FACTOR**	420 to 42	70 to 14	21 to 4.2	7 to 1.4	420 to 42	70 to 14	21 to 4.2	7 to 1.4

*With accessory 100:1 Voltage Divider (see Table 1).

**Maximum permissible ratio of peak to rms value of voltage.

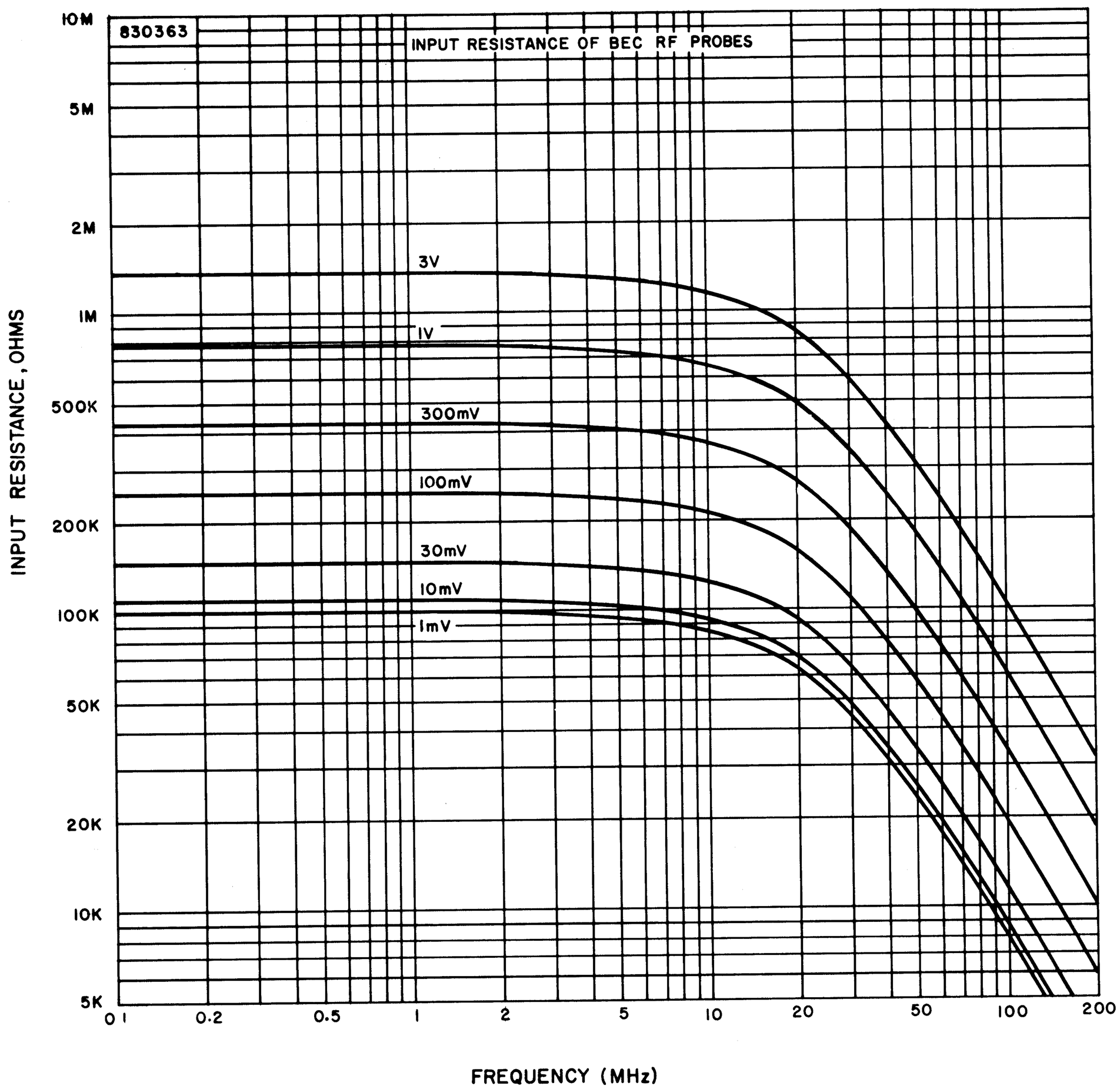

Figure 1. Input Resistance of RF Probe as a Function of Input Level and Frequency

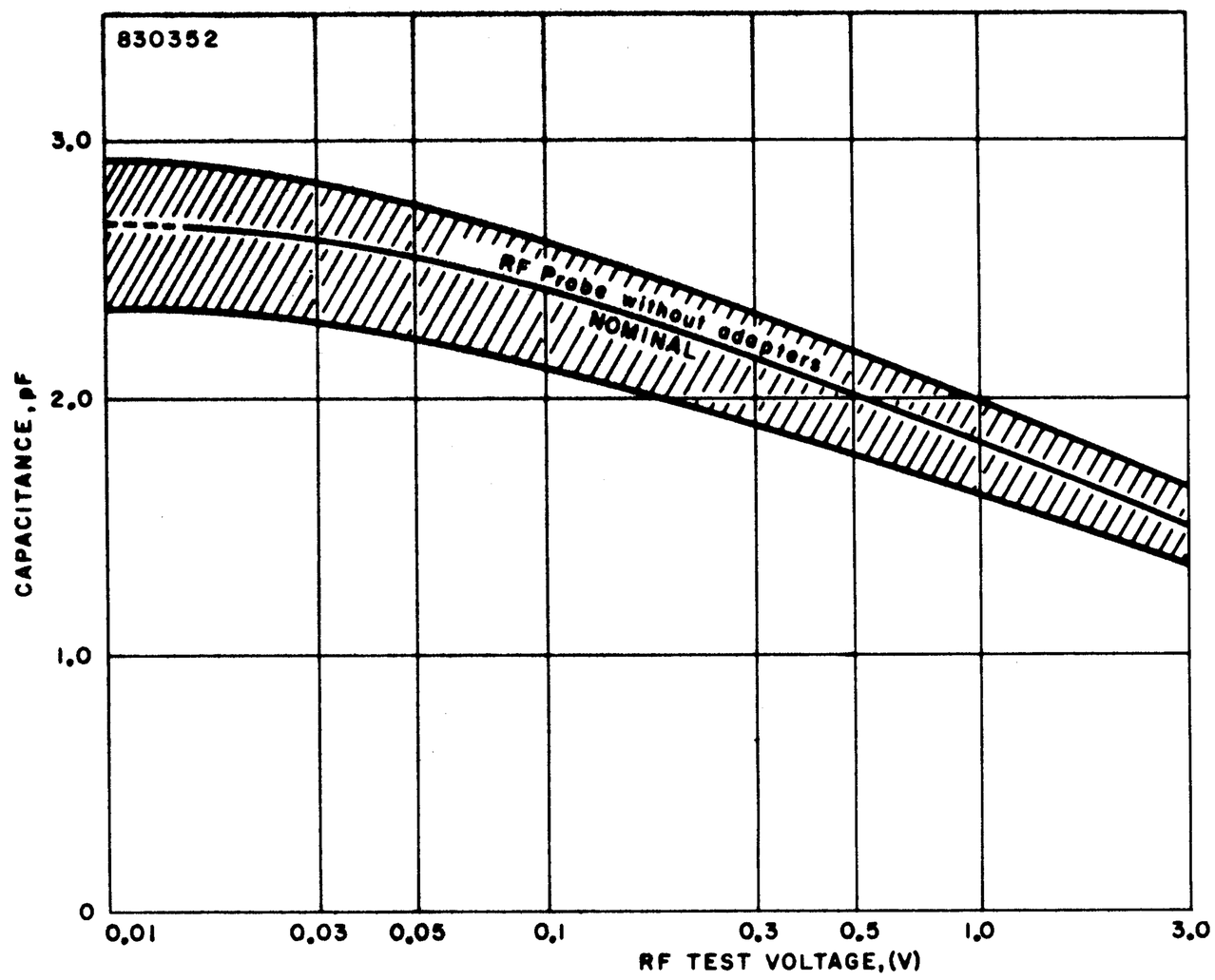

Figure 2. Input Capacitance vs. Input Level of Model 91-12F Probe (Measured at 10 MHz)

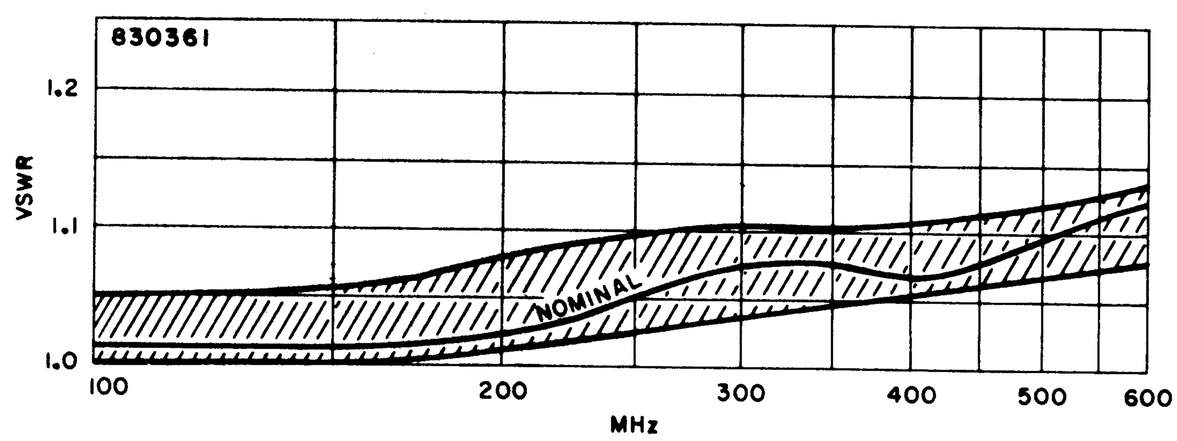

Figure 3. Typical VSWR of Model 91-12F RF Probe with Model 92-8B 50 Ω Adapter

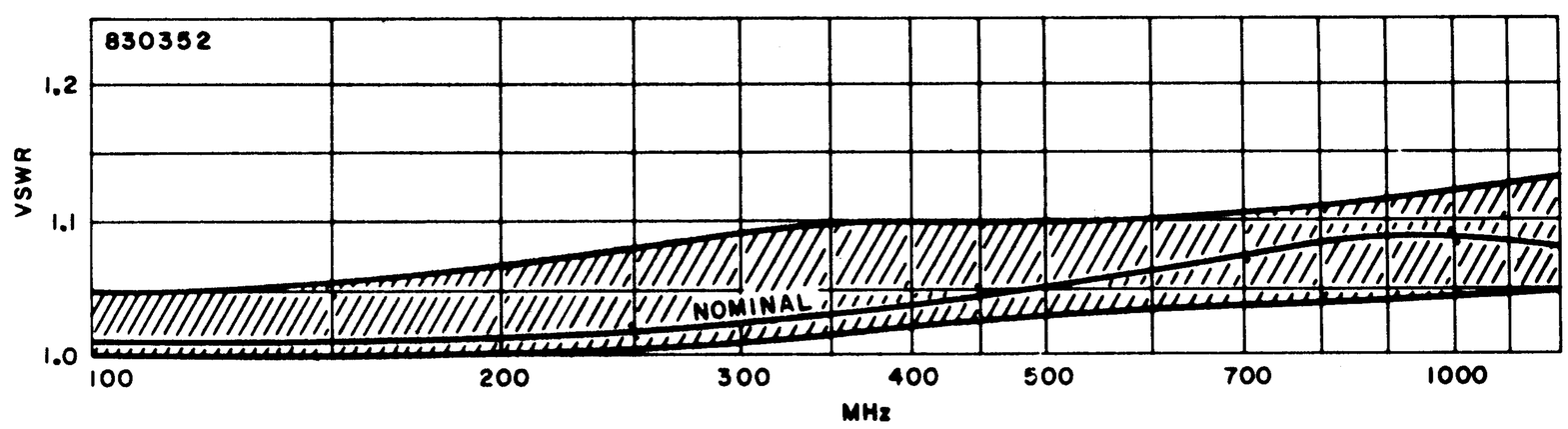

Figure 4. Typical VSWR of Model 91-12F RF Probe with Model 91-14A Type N Tee Adapter and Model 91-15A 50 Ω Termination

III. OPERATION

3.1 INSTALLATION

The Model 92BD has been inspected and tested at the factory before packing, and is shipped ready for operation. If there is any indication of shipping damage, immediately notify the carrier before attempting to put the instrument into operation.

3.1.1 Operating Controls and Indicators

The controls and indicators installed on the Model 92BD are shown in Table 3.

Table 3. Model 92 Series Controls and Indicators

ITEM	FUNCTION
Selector	This switch turns on the instrument power, and if the instrument is the 92BD-09 option, selects either mV or dBm readout.
FULL SCALE Range	These range pushbuttons (1, 3, 10, 30, 100, 300, 1000, and 3000 mV), and (-50, -40, -30, -20, -10, 0, +10, and +20 dBm) select the operating range. The AUTO pushbutton, for the 92BD-01 option, switches the instrument to the automatic ranging mode.
Indicators	
Digital:	LED, 4 digits, f.s. counts of 3000 and 1000. Full 4-digit display with dB option, 0.01 dB resolution. Blanked at 5% over and below 20% f.s.; decimal point, units, and polarity for dBm.
Analog:	Miniature edgewise type, calibrated -9 to +3 dBm, 50 Ω.
PROBE (Jack)	The probe cable connects to the instrument through this PROBE jack. Always check that the knurled ferrule nut of the probe cable connection is tightened when in use.
ZERO (Control)	This control is used to zero the instrument.

The following items are on the rear panel:

Fuse Holder and Fuse	A fuse holder is located on the rear panel for installing either a 0.20 ampere, 115 V, or a 0.1 ampere, 220 V, Bussman MDL SLO-BLO fuse.
Slide Switch	Switch that is set to 115 V or 230 V, according to the available power source. Be sure that the proper fuse is located in the fuse holder.
Recorder Output Terminals	A DC voltage proportional to the indicator reading is available at these terminals. F. S. output = +10 V; output resistance = 9 kΩ.
Component Holders (Clips)	Three component holders or component clips are located at the rear panel for securing accessories which are not in use.
REMOTE CONNECTIONS (Use with Amphenol 225-222221-101 connector or equivalent)	A card edge connector is mounted at the rear of the instrument. See Figure 13 for the pin designations.

This safety requirement symbol has been adopted by the International Electrotechnical Commission, Document 66 (Central Office) 3, Paragraph 5.3, which directs that an instrument be so labeled if, for the correct use of the instrument, it is necessary to refer to the instruction manual. In this case it is recommended that reference be made to the instruction manual when connecting the instrument to the proper power source.

Verify that the right fuse is installed for the power available and that the 0.20 A and 0.10 A, 50-400 Hz switch on the rear panel is set to the applicable operating voltage of 115 V or 230 V.

3.2 OPERATING PROCEDURES

In the following paragraphs, the initial operating procedure for the 92BD is described, as well as operating notes and recommended connection methods.

3.2.1 Initial Operating Procedure

a. Be sure that the serial number of the probe to be used is the same as that of the Model 92BD. (Each instrument is calibrated for its particular rf probe.) Use of a probe other than that for which the instrument was calibrated may result in measurement errors.

b. Connect the probe cable to the PROBE jack on the front panel.

c. Check the setting of the power switch on the rear panel to be sure that it is set to the proper position for the line voltage available.

d. Plug the instrument's power cable into a power receptacle and turn the selector switch to mV. Allow a minute for the instrument to warm up.

e. Press the 1 mV range button; the panel meter pointer should rest on the zero reference line. If it does not, use the ZERO control to set the meter to zero. (This adjustment will hold for the other ranges.) The 92BD is now ready for use. (See 3.3.4.)

3.3 OPERATING NOTES

While using the Model 92BD is a direct and straight-forward process, there are certain precautions and procedures which *must* be observed to obtain satisfactory results.

3.3.1 Overload Limits

The Model 91-12F RF Probe supplied with the Model 92BD is overload-protected to 10 volts, ac, and to 400 volts, dc. EXCEEDING THESE LIMITS MAY RESULT IN PERMANENT DAMAGE TO THE PROBE.

The Model 92-8B 50-ohm Adapter should not be subjected to continuous overload of more than 10 volts (dc + rms ac) to avoid excessive heating of the terminating resistor.

Where voltages above these limits are likely to be encountered, the Model 91-7C 100:1 Voltage Divider is required. Maximum rating of the Voltage Divider is 1000 volts dc + peak ac.

3.3.2 Connection for Measurements Below 100 MHz

The RF Probe supplied with the Model 92BD is equipped with a detachable tip and ground lead. For measurements of signals below approximately 100 MHz, this tip provides a convenient means for both signal and ground connection.

3.3.3 Connection for Measurements Above 100 MHz

For frequencies above 100 MHz, the probe tip should not be used with the Model 92BD. Connection should be made directly to the center contact of the probe with the ground connection kept as short as possible (see Figure 5).

The connection recommendations outlined in Table 4 should be followed to maintain specified accuracy.

Table 4. Connection Recommendations

FREQUENCY	SIGNAL CONNECTION
Up to 100 MHz	Probe Tip and ground lead (supplied)
100 MHz to 250 MHz	Probe without tip (see Fig. 5) (supplied)
250 MHz to 600 MHz	Probe with Model 91-8B 50 Ω BNC Adapter (supplied)
Beyond 600 MHz	Probe with Model 91-14A Type N Tee Adapter and Model 91-15A Type N 50 Ω Termination (see Figure 6) (optional accessories)

3.3.4 Low-Level Measurement

The Model 92BD will provide reliable, reproducible measurements of signal levels as low as 200 microvolts.

Preliminary zero adjustment is essential when using the lowest range scale to achieve the specified accuracy, and is strongly recommended for all ranges up to 30 millivolts.

When the instrument is to be used on the 1 mV range, the following zero adjustment procedure should be followed:

a. Set the FULL SCALE range selector to the 1 mV position.

b. Be sure that no voltage is applied to the probe, and that it is adequately shielded from local fields. This can be done by partially unscrewing the probe cap until the tip just breaks contact with the internal connector, leaving the metal shell engaged with the body threads. Alternately, the probe tip can be removed and the 50-ohm termination (Model 91-8B) mounted in its place.

c. Adjust the ZERO control to bring the edgewise meter reading to zero. Noise, in the vicinity of zero, may cause the reading to fluctuate up to ±5% of full scale. Adjust the ZERO control so that the reading averages zero.

3.3.5 Over/Under Range Indication

When the rf voltage applied to the probe is approximately 5% above the maximum, or 12% below the minimum, of the range in use, the digital indicator will blank out. In this case, switch to the next appropriate range.

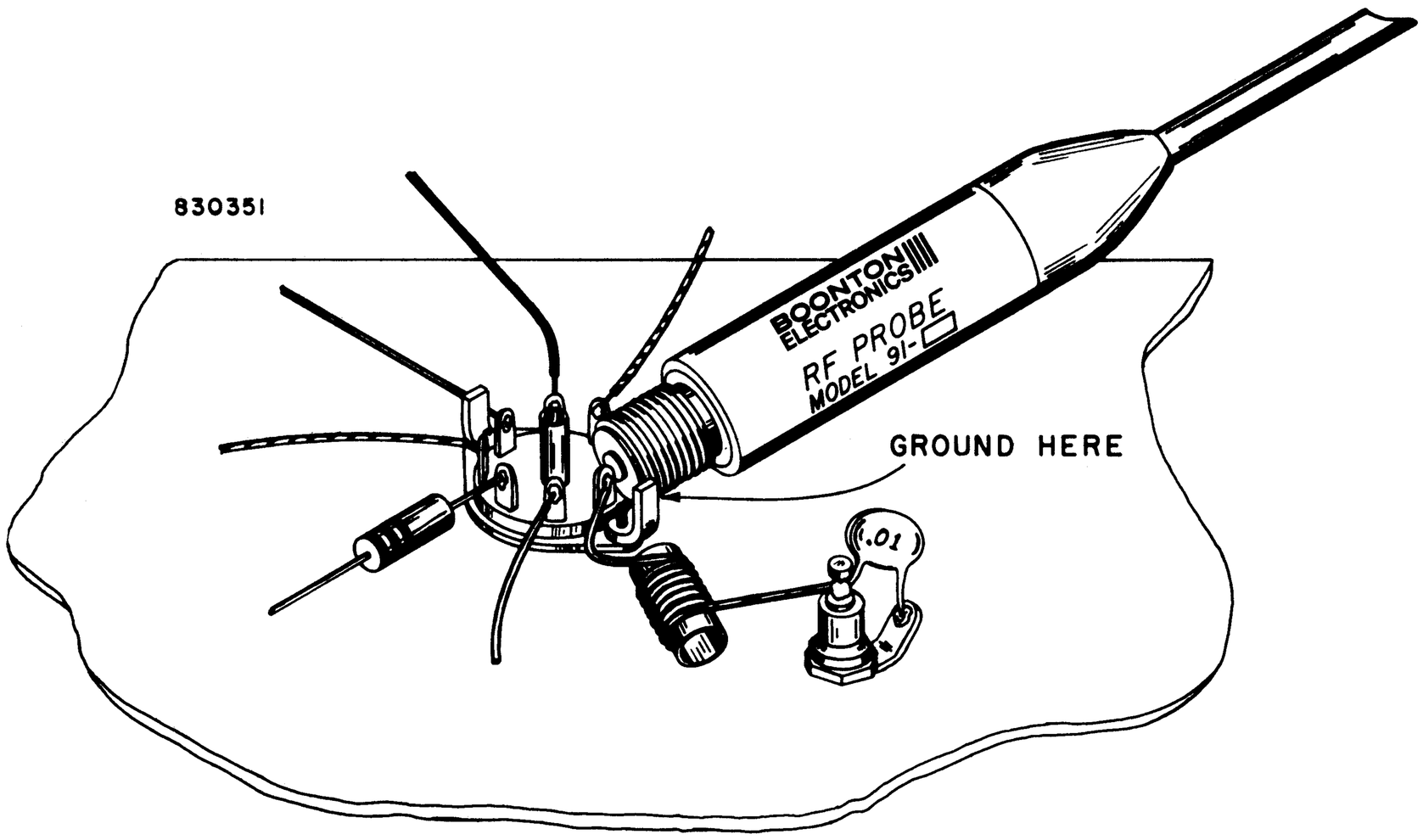

Figure 5. Method for making low-inductance connections to test signal point directly using the RF probe.

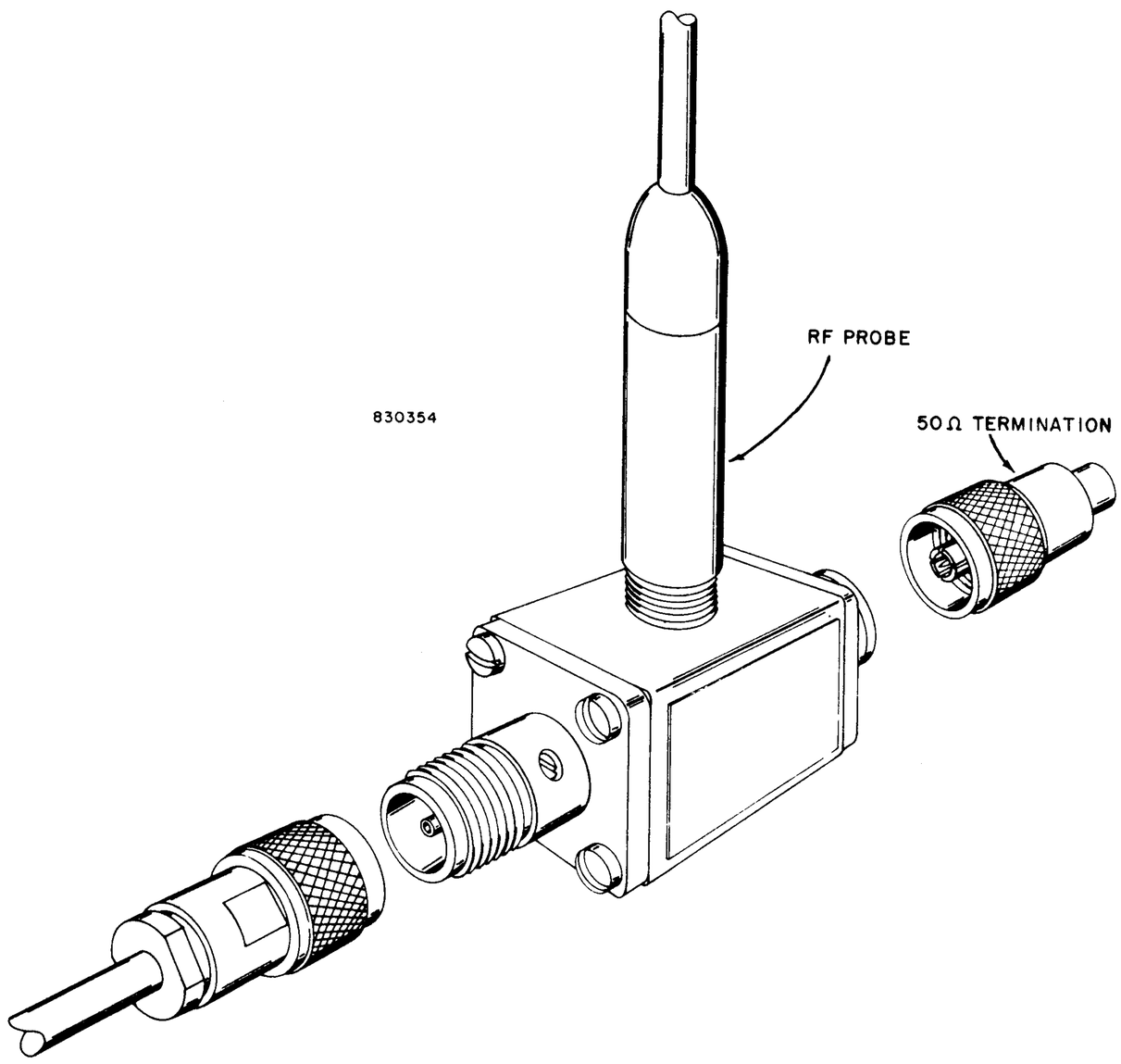

Figure 6. Assembly of Model 91-14A Type N Tee Adapter

3.3.6 Making the Zero Adjustment

When the instrument is to be used on the 1 mV range, the following zero adjustment procedure applies:

a. Set the FULL SCALE range selector to the 1 mV position.

b. Be sure that no voltage is applied to the probe, and that it is adequately shielded from local fields. (See Paragraphs 3.3.4 and 5.2.)

c. Adjust the ZERO control to bring the edge meter reading to the zero reference line. Noise may cause the reading to fluctuate up to ±5% of full scale. Adjust the ZERO control so that the reading averages to zero.

3.3.7 Signal Overload on 1 mV Range

Applications of a large ac signal on the most sensitive (1 mV) range overloads the amplifier and a short time is required for the high-impedance input circuit to discharge. This effect is significant for signals above approximately 100 millivolts. Typically, application of a 1 volt signal will require a recovery time of about thirty seconds before subsequent measurement should be made. It should be noted, however, that such overloads cause no damage to the equipment as long as they are within the limits outlined in Paragraph 3.3.1.

3.3.8 Temperature Effects

The accuracy specifications for the Model 92BD apply over temperatures from 50°F to 104°F. Outside of these limits operation of the equipment is possible but appreciable inaccuracies can be expected. However, no permanent change in probe characteristics will result from any reasonably high or low temperature exposure.

It should be noted that inaccuracies of measurement resulting from temperature effects may occur shortly after soldering to the probe tip, or measuring with the probe in the vicinity of heat sources such as resistors, heat sinks, vacuum tubes, and so forth.

When making low-level measurements (below approximately 2 millivolts) it is important to make sure that the probe has attained a uniform temperature throughout its body. A temperature gradient between the inside and outside of the probe can generate a small thermal voltage that may add to the dc output of the detector diodes.

3.3.9 Hum, Noise, and Spurious Pickup

When measuring low-level signals, precautions should always be taken to avoid the possibility of errors of measurement resulting from hum, noise, or stray rf pickup. Although all low-frequency hum and noise are attenuated at the input, it is still possible for unwanted high-level signals to cause errors. In some cases it may be necessary to provide extra shielding around the probe connections to reduce stray pickup. Typical sources of spurious radiation are: induction or dielectric heating units, diathermy machines, local radio transmitters, and grid dip meters.

3.4 LINEAR DC OUTPUT

The dc output provided at the rear panel binding posts is a linear function (typically, ±1% f.s.) of the input level, as long as the input signal is greater than 20% of full scale. For inputs less than 20% of full scale the output is not linear, but may be corrected by referring to Paragraph 3.6 and Figure 7. Polarity of the dc output is positive with respect to the instrument ground, the negative dc output terminal being at ground potential. Output resistance is 9 kΩ.

3.5 LOW-FREQUENCY MEASUREMENTS

The Model 91-12F RF Probe supplied with the Model 92BD provides measurements within the specified accuracy from 10 kHz to 1.2 GHz. For measurements at lower frequencies the Model 91-4C Probe is available. It operates over a frequency range from 1 kHz to 250 MHz.

IMPORTANT NOTE: After installing the Model 91-4C RF Probe, the Model 92BD *must* be checked for accuracy of calibration, and recalibrated if required (see Paragraphs 5.3 and 5.4).

3.6 CORRECTION CURVES FOR ACTUAL VOLTAGE vs. DC OUTPUT

Use the correction curves of Figure 7 to correct dc output on the Model 92BD and Model 92BD Option Instruments.

3.7 CORRECTION CURVE FOR MODEL 91-8B

Use the correction curve of Figure 8A to make corrections when using the Model 91-8B, 50 Ω Adapter with the Model 92BD and Model 92BD Option Instruments.

3.8 CORRECTION CURVE FOR MODEL 91-14A

Use the correction curve of Figure 8B to make corrections when using the Model 91-14A Type N Tee Adapter with the Model 92BD and Model 92BD Option Instruments.

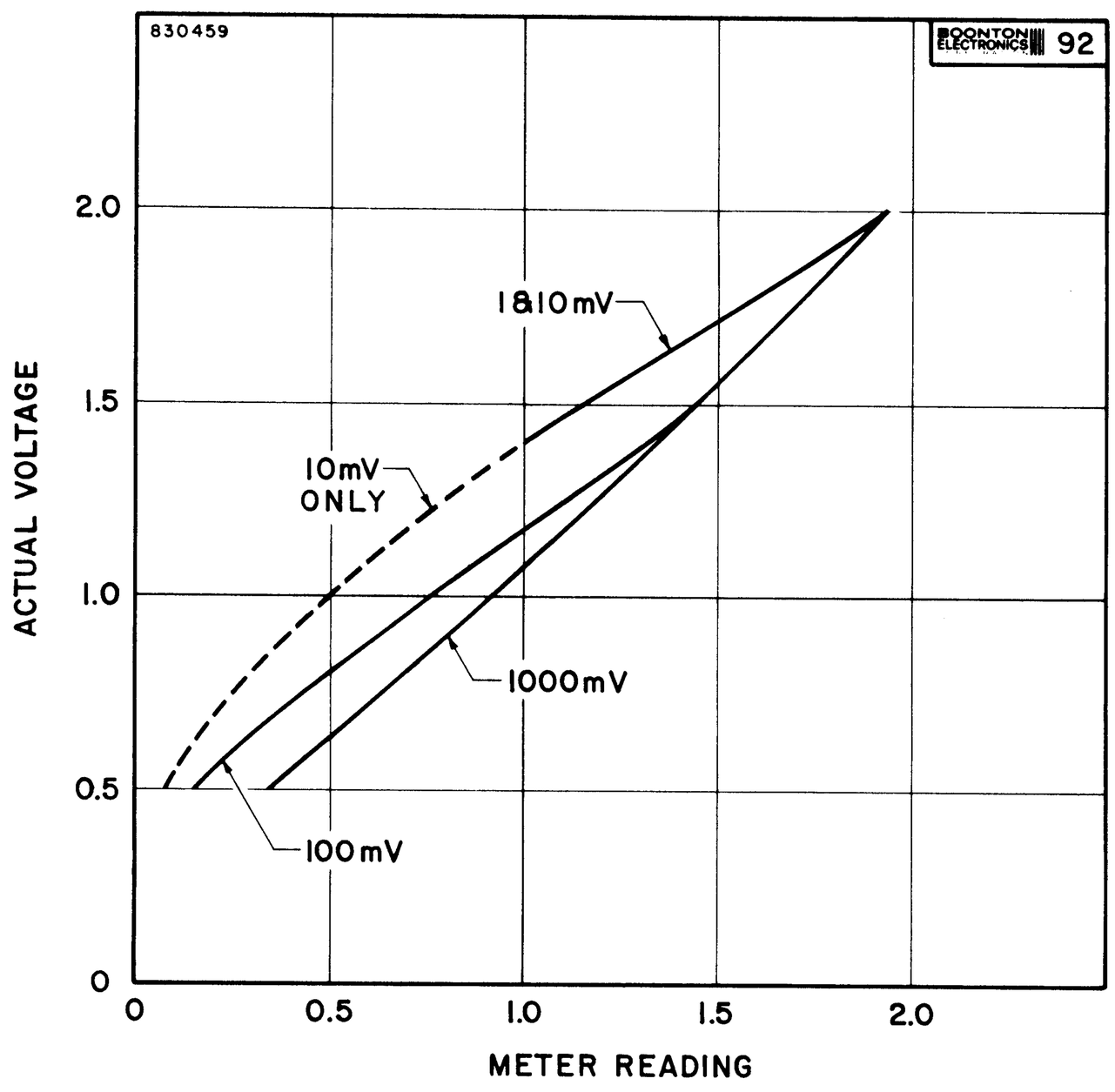

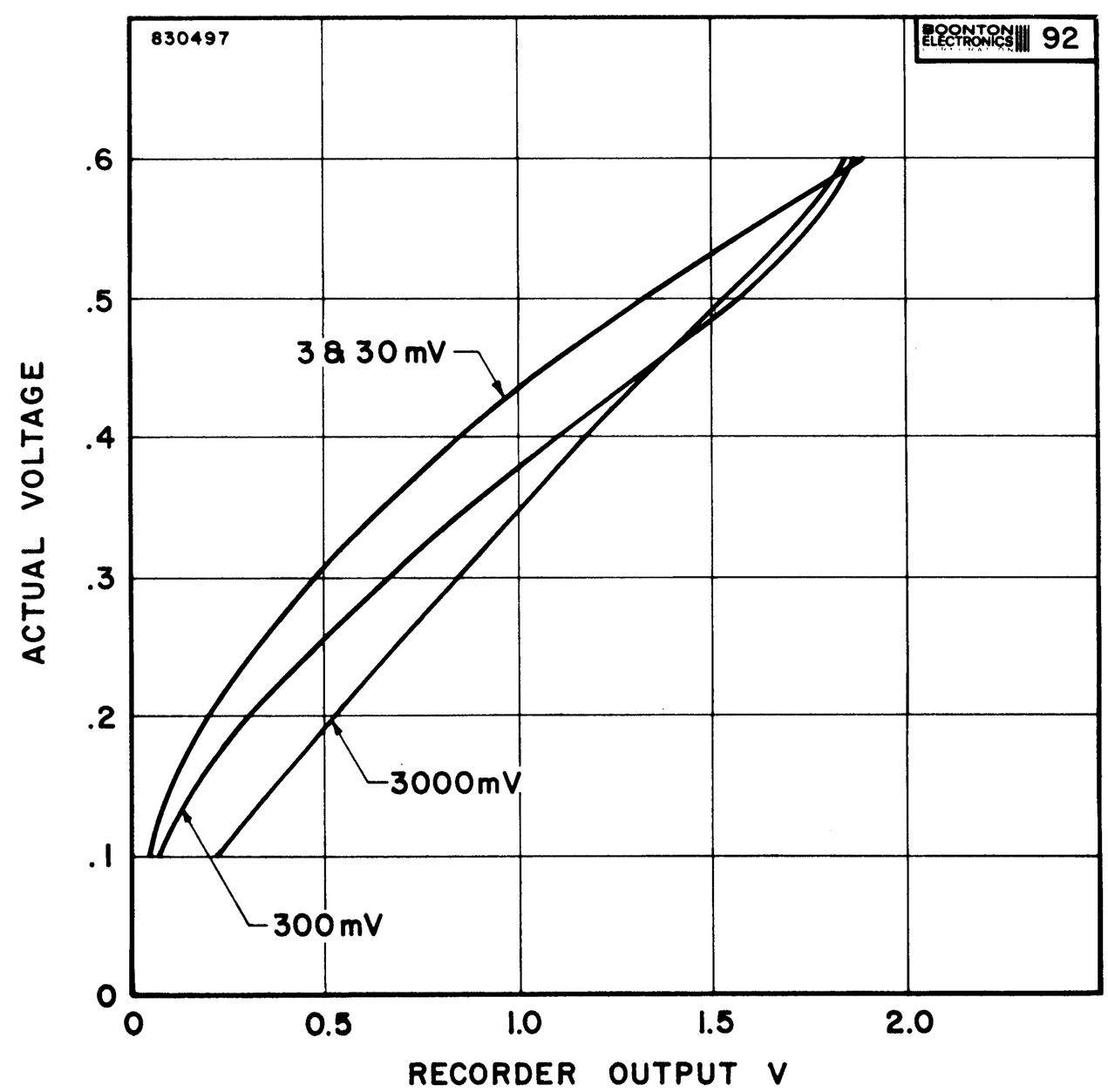

Figure 7. Down-Scale Correction Curves, Recorder Output.

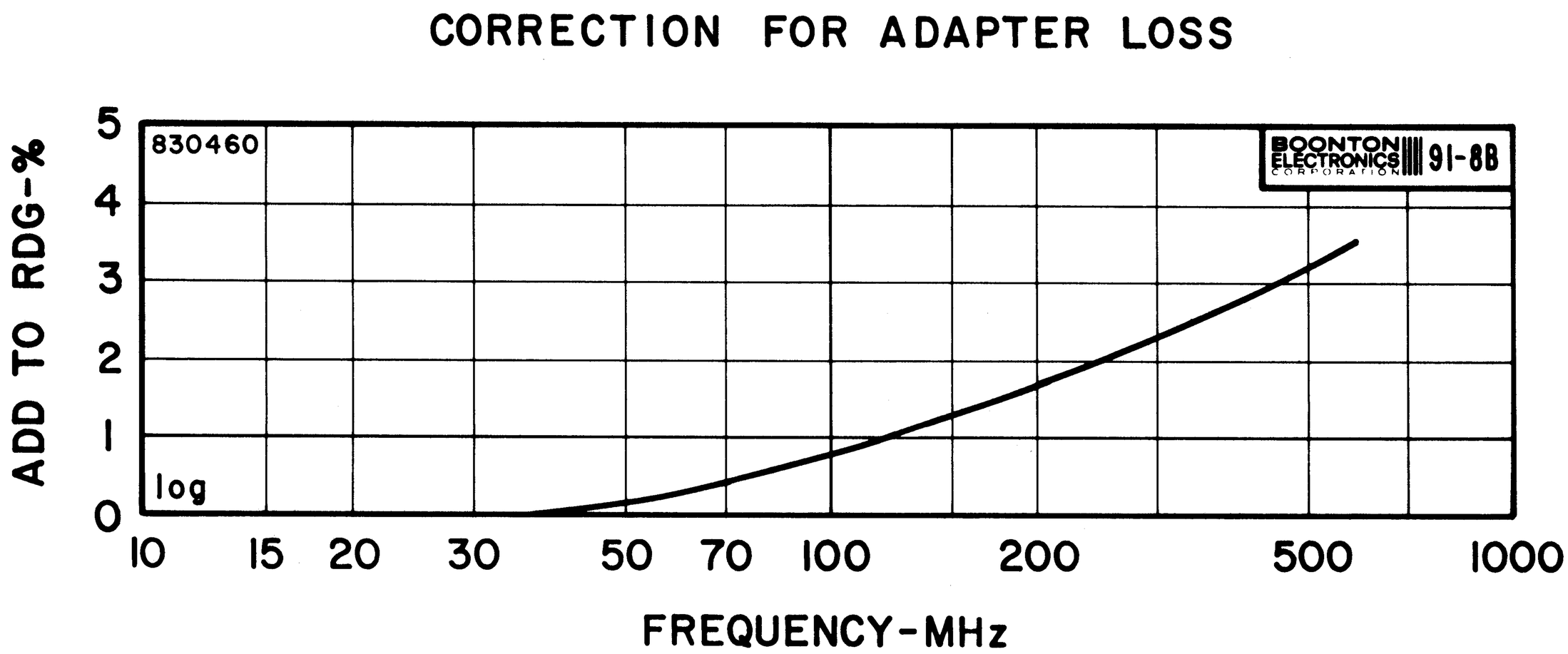

Figure 8A. Model 91-8B 50 Ω Adapter Correction Curve. (Add to indicated readings.)

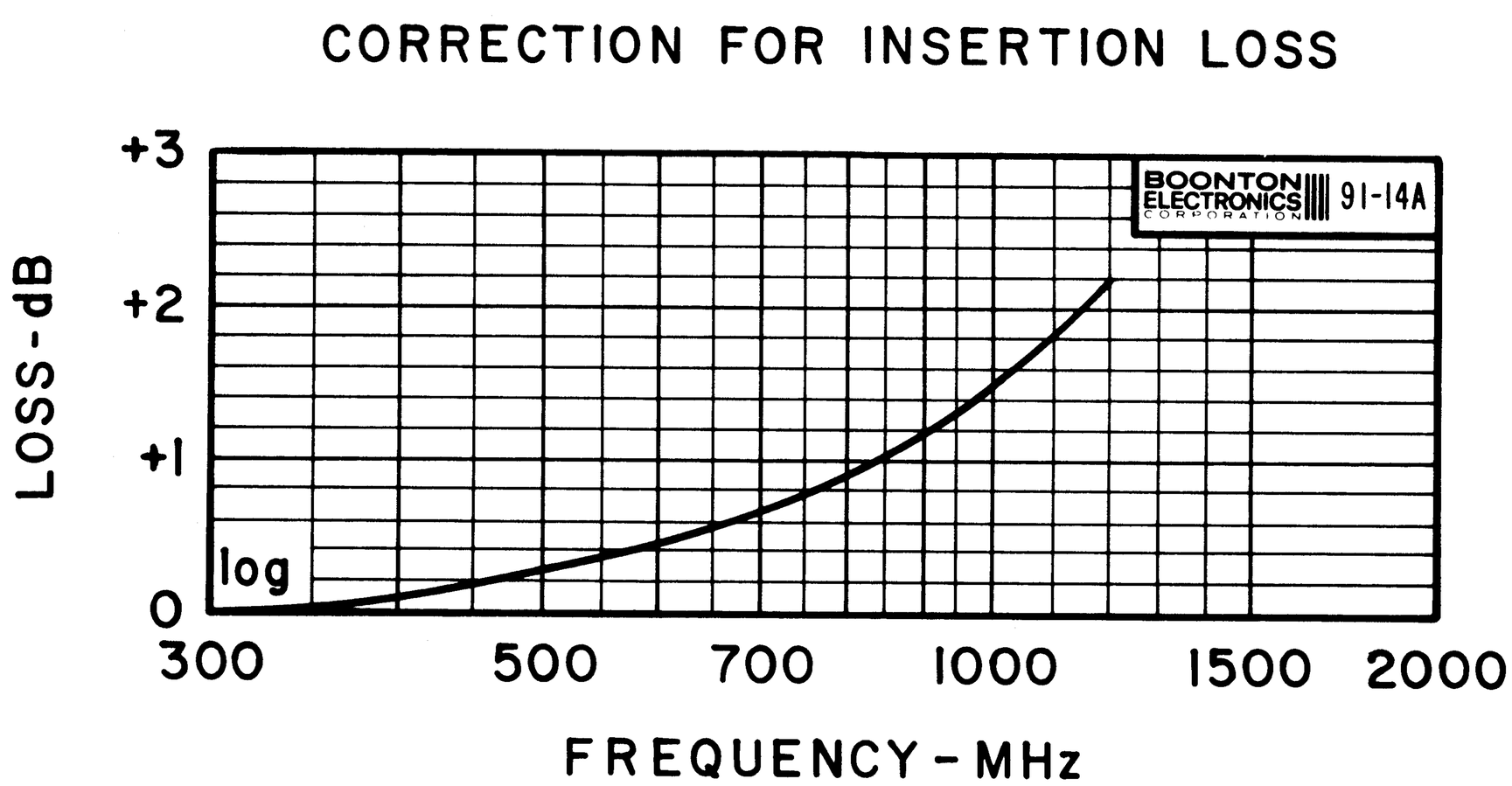

Figure 8B. Model 91-14A Type N Tee Adapter Correction Curve. (Input voltage to tee adapter is indicated by voltmeter. Subtract the correction from the indicated value, in dB, to obtain output voltage of tee.)

IV. THEORY

4.1 GENERAL

The operating principles of the Model 92BD are shown in the following block diagram. The essential elements of the instruments are the probe, chopper driver, chopper, attenuator, preamplifier, pulse generator, sync detector, shaping amplifier, digital control, analog to digital converter, digital display, panel meter, and power supply.

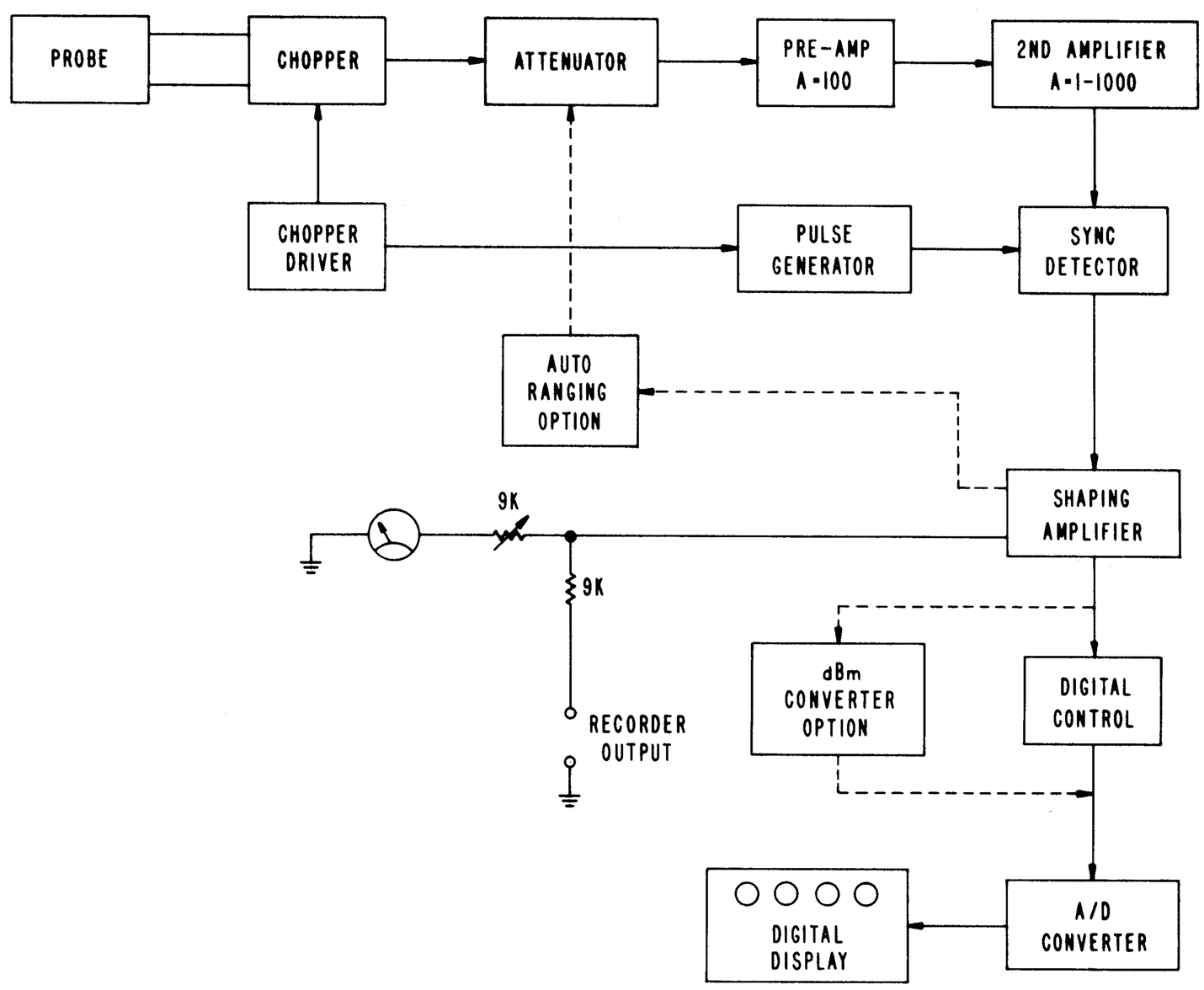

Figure 9. Model 92BD Block Diagram

4.1.1 RF Probe

The RF Probe embodies a full-wave diode detector which rectifies the signal under study to a dc voltage whose level is a function of the input level. While operating in the square-law region (below approximately 30 millivolts) the detector provides true rms response. As the input level increases beyond 30 millivolts, waveform response gradually approaches peak-to-peak, calibrated on the indicator in rms.

In addition to increasing efficiency, use of full-wave rectification in the detector probe permits measurement of signals having highly asymmetrical waveforms without errors stemming from turn-over effect.

The diodes used in the RF Probe have been carefully selected for specific characteristics. The user is urged NOT to attempt their replacement with any off-the-shelf types. In case of damage to probe components, call your local Boonton Electronics Sales Engineering Representative, or the factory, for instructions.

4.1.2 Attenuator and Amplifiers

The dc output of the probe is converted to ac by the mechanical chopper. The resultant ac signal is applied to the attenuator and amplifier sections. For each range the output voltage from the second amplifier is approximately 3 V peak-to-peak. It is accomplished by ranging both the attenuation and the gain of the second amplifier in the following manner:

RANGE	$\frac{1}{\text{ATTN}}$	GAIN 2nd AMP.
1	1	1000
3	1	100
10	1	10
30	1	1
100	0.15	1
300	0.04	1
1000	0.01	1
3000	0.004	1

The preamplifier has a constant gain of X100, and is designed for very low input noise. Both amplifiers have wide bandwidths and are stabilized by large amounts of negative feedback.

4.1.3 Synchronous Detector

The amplified ac signal from the second amplifier is converted to dc by the synchronous detector. The peak-to-peak amplitude is derived from a shunt-series capacitor storage circuit using JFET switches. The synchronous detector is driven by pulses in the chopper-driver circuit, thus assuring exact synchronization. The characteristics of the detector determine the effective bandwidth of the amplifier-detector combination and allow modification of the bandwidth for different range conditions. The detector also provides conversion without offset, with excellent linearity.

4.1.4 Shaping Amplifier

The conversion of rf to dc in the probe is non-linear, the response being square-law for the lowest ranges and gradually becoming quasi-linear for the 3 V range. The shaping amplifier converts the non-linear output of the phase detector to a linear output by using a segmental approximation to the exact correction. The shaping amplifier is actually an operational amplifier so connected that, as the signal increases at its output, its gain is reduced by successively paralleling resistors across the feedback resistors. The number of segments required to adequately linearize the response varies from 6 for the "square-law" ranges down to 2 for the 3 V range. The output of the shaping amplifier is +10 V which drives the panel meter and is applied to the recorder terminals through a 9 kΩ resistor.

4.1.5 Digital Control

The analog dc signal voltage from the Shaping Amplifier is processed by the Digital Control circuits before being passed on to the Analog-Digital Converter and the Digital Display. The Digital Control section divides the incoming voltage (10 volts full-scale) by factors of 20 or 6.3, depending upon which range group has been selected. It extracts information for the control of range, decimal point position, over- or under-range readings, polarity indicator, and identification (mV or dBm). On the 92BD-09 Option Instrument, this section also contains the additional circuitry to convert the incoming voltage information into dBm values. The processed analog incoming voltage is then passed on to the Analog/Digital Converter section.

4.1.6 Analog/Digital Converter

This is a dual-slope type of converter; incoming analog information is changed to digital form and applied to the Digital Display Unit, where the appropriate segments of the LED display are triggered. These show not only numerals, but also over- or under-range indication, polarity, and either mV or dBm indicators.

4.1.7 Chopper-Driver Circuits

The chopper-driver block provides all of the drive signals required by the instrument. The chopper frequency is obtained by dividing the output of a unijunction oscillator by two. The oscillator also generates the switching pulse for the synchronous detector. Diode gating feeds the pulse to the proper JFET depending upon chopper phase. The chopper frequency is normally adjusted to 94 Hz, but can be changed ±10 Hz to avoid beating with harmonically related ground currents.

4.1.8 Power Supply

The power supply converts the ac input power to regulated +15 V and -15 V outputs. Each supply is protected by current limiting against accidental short circuits. Both supplies are adjustable to 15.0 ± 0.1 V.

4.1.9 Programming

The instrument is organized around an eight-line ranging system. In each functional subcircuit the switching is accomplished by solid-state devices, generally JFET's, which are actuated by the appropriate range line. The front panel range switch simply connects to the eight range lines to allow range selection. The range lines are buffered by a logic level converter. The instrument may be externally ranged by a logic "0" command on the appropriate range line and manual disable line. (It is recommended that an Amphenol 225-22221-101 connector be used for remote programming connection.)

V. MAINTENANCE

5.1 PERIODIC CALIBRATION

The Model 92BD is designed to provide trouble-free operation over extended periods of time. However, as with any precision instrument, the instrument should be checked periodically to verify proper calibration. To make such calibration checks, the Boonton Model 26A RF Millivoltmeter Calibrator provides the correct signal levels required to calibrate full-scale, as well as incremental values on all ranges of the 91 and 92 Series RF Millivoltmeters. If a Boonton Model 26A Calibrator is not available, these auxiliary instruments are required:

a. A reliable signal source of 200 kHz to 500 kHz with less than 1% distortion at levels up to 3 volts across 50 ohms.

b. A precision voltmeter such as the Ballantine Model 310A or 314, the Boonton Electronics Model 93A or 93AD, or the Hewlett-Packard Model 400D or 400H or equivalent.

The following instruments are also needed:

c. A precision dc voltmeter capable of measuring ±15.0 V with an accuracy of ±0.1% and an input impedance > 10 MΩ.

d. Frequency counter, such as Monsanto Model 100A.

5.2 PRECAUTIONS WHEN CHECKING CALIBRATION

When checking the calibration of an instrument having the sensitivity and bandwidth of the Model 92BD, it is essential to take precautions against errors resulting from stray pick-up voltages (see Paragraph 3.3.9). A well-shielded signal source must be used in conjunction with coaxial connections to both the Model 92BD and the standard reference meter. Even with a well-shielded generator and connections, it is sometimes possible for the reference meter to pick up stray rf signals and feed them into the probe. It is advisable to test for this condition by disconnecting the standard meter and noting any change in level.

5.3 CALIBRATION CHECK

Using the equipment suggested in Paragraph 5.1, check the calibration of the Model 92BD on each range using a test voltage equal to the full scale value. If the check reveals that recalibration is required, the procedure outlined in Paragraph 5.4 should be followed.

5.4 CALIBRATION PROCEDURE

A calibration outline is provided inside the top cover of the instrument (see Figure 12). The adjustment references listed below are the same as those recorded on the top cover.

Adjustment No. 1. Measure the -15.0 V supply voltage at the -15 V Test Point located on the Main Amplifier board at C119. Adjust R143 to -15.0 ± 0.1 V.

Adjustment No. 2. Measure the +15.0 V supply voltage at the +15 V Test Point located on the Main Amplifier board at C118. Adjust R140 for a reading of +15.0 ± 0.1 V.

Adjustment No. 3. Set the FULL SCALE range selector to the 1000 mV range. Apply an input of 1000 mV and measure the chopper frequency at Test Point 13, located on the Chopper-Driver board. Adjust R244 for a frequency of 94 ± 1 Hz (106.4 mS). In some cases it may be desirable to offset the chopper frequency to avoid beating with a harmonic of the power line frequency. Any frequency within the adjustment range will not degrade the performance of the instrument.

Adjustment No. 4. Set the FULL SCALE range selector to the 1 mV range and zero the instrument as described in Paragraph 3.3.4.

Adjustment No. 5. Set the FULL SCALE range selector to the 30 mV range and adjust R233 for a zero reading at the RECORDER terminals on the back panel.

Adjustment No. 6. Set the FULL SCALE range selector to the 1000 mV range and apply an input of 1000 mV; adjust R353 for +10.00 V at the RECORDER terminals.

Adjustment No. 7. Set the FULL SCALE range selector to the 1000 mV range and apply an input of 1000 mV; adjust R645 for 0.500 Vdc at pin 8 of IC606.

Adjustment No. 8. Set the FULL SCALE range selector to the 3000 mV range and apply an input of 3000 mV; adjust R363 for +9.487 V at the RECORDER terminals.

Adjustment No. 9. Set the FULL SCALE range selector to the 3000 mV range and apply an input of 3000 mV; adjust R632 for for 1.500 Vdc at pin 11 of IC606, and adjust R1405 for a reading of 3000 mV.

Adjustment No. 10. Set the FULL SCALE range selector to the 1 mV range (zero the instrument as in Adjustment No. 4). Apply an input of 1.000 mV, and adjust R303 for a reading of 1.000 mV.

Adjustment No. 11. Set the FULL SCALE range selector to the 3 mV range (zero as in Adjustment No. 4). Apply an input of 3.000 mV, and adjust R308 for a reading of 3.000 mV.

Adjustment No. 12. Set the FULL SCALE range selector to the 10 mV range (zero as in Adjustment No. 4). Apply an input of 10.00 mV, and adjust R318 for a reading of 10.00 mV.

Adjustment No. 13. Set the FULL SCALE range selector to the 30 mV range and apply an input of 30.00 mV; adjust R328 for a reading of 30.00 mV.

Adjustment No. 14. Set the FULL SCALE range selector to the 100 mV range and apply an input of 100.00 mV; adjust R341 for a reading of 100.0 mV.

Adjustment No. 15. Set the FULL SCALE range selector to the 300 mV range and apply an input of 300.0 mV; adjust R347 for a reading of 300.0 mV.

Adjustment No. 16. (For instruments with Autoranging option only) NOTE: This control will normally not require adjustment.

Set the FULL SCALE range selector to the 1000 mV range and apply an input of 1000 mV; switch the FULL SCALE range selector to the AUTO mode position. Increase the input level slowly, noting the point where the instrument ranges up to the 3000 mV range. Adjust R716 for a range trip at 1030 ± 10 mV. It will be necessary to repeat this step several times to achieve the desired setting.

These adjustments require a continuously variable rf input level, which can best be obtained from a signal generator or oscillator. If necessary, a low resistance potentiometer may be connected between the 26A RF Millivoltmeter Calibrator and the RF Probe. Absolute power levels and impedance matching are unimportant for these adjustments.

Adjustment No. 17. Set the FULL SCALE range selector to the 300 mV range and apply an input of 224 mV (0 dBm, 50 Ω); adjust R644 for 0 dBm indication on the edge meter.

For instruments with other dB options, use the following table:

Option	Range	Level	Impedance	Adj. to
92BD-10	3000 mV	+8.66 Vdc	75 Ω	0 dBm
92BD-12	1000 mV	+10.0 Vdc	-	+60 dBmV
92BD-03	1000 mV	+10.0 Vdc	-	0 dBv

Adjustments No. 18 and 19. Depress the 3000 mV button of the FULL SCALE range selector and set the OFF/mV/dBm switch to dBm. Remove the digital control board and mask pins 1, 2, Z, and 22 with tape. Return the digital control board to the extender card. Apply -6.00 Vdc ±0.1% at the junction of R627 and R629, schematic 830581. If necessary, adjust R1408 on the digital panel meter board, schematic 830546, for a 6000 count indication. Remove -6.000 Vdc from the junction and apply +7.071 Vdc ±0.1% at the junction of R636 and R643, schematic 830581.

Set the OFF/mV/dBm switch to dBm. Depress the 3000 mV button of the FULL SCALE range selector and adjust R614, schematic 830581, for a display of +20.00 dBm. Depress the 1 mV dBm button of the FULL SCALE range selector and adjust R626 for a display of -50.00 dBm. Repeat these steps to adjust for a 70 dB difference between +20 and -50 dBm. Depress the 300 mV button of the FULL SCALE range selector and adjust R614 for a display of 0.00 dBm. Check each range for the correct reading in dBm, ±0.1 dB; touch up R626 to bring in the middle ranges if they are out by more than ±0.2 dB. Increase the applied dc voltage to +10.00 Vdc. Depress the 0 dBm button of the FULL SCALE range selector and note the display. Decrease the applied +10.00 Vdc to a value of 3.162 Vdc ±0.1%. Note the display. Adjust R619 for a 10 dB difference between the readings. Remove voltage from the junction and from the digital control board. Remove the extender card and insert the digital control board into the connector.

Adjustment No. 20. (This adjustment will be required only if IC1202 is replaced.) Adjust C1203 for a 50 mS pulse measured at Pin 8 of IC1402. If this value cannot be obtained within the range of C1203, try slightly different values of C1202 (up to 200 pF) until the 50 mS pulse is within the range of the trimmer.

5.5 TROUBLESHOOTING PROCEDURE

The following troubleshooting procedures describe the instrument's cover removal, chopper replacement and voltage and resistance tests.

5.5.1 Cover Removal

The cover of the instrument may be removed from the case by removing the screw on the top of the case.

5.5.2 Chopper Replacement

If unsatisfactory operation of the Model 92BD develops, a replacement chopper should be tried. (NOTE: The chopper used in the Model 92BD is a special Boonton Electronics Corporation part. For replacements or spares, call your local Boonton Electronics Representative, or the factory.) If the new chopper does not clear the difficulty, place the original chopper back in the socket. The calibration accuracy should be rechecked after replacement.

5.5.3 Voltage and Resistance Tests

If it is determined that the trouble cannot be cured by replacement of the chopper (as noted above), it is advisable to make a systematic check of the ac voltage, dc voltage, and resistance. Once the trouble has been found and corrected, the calibration must be rechecked and readjusted as outlined in Paragraphs 5.3 and 5.4.

5.5.4 Test Points

Test points, waveforms, and related test voltages are shown in the Model 92BD schematics.

5.5.5 Replacement of RF Probes

The serial number of the Model 92BD matches that of the Model 91-12F RF Probe with which it was calibrated at the factory. If it is necessary to change probes for any reason, the instrument's calibration MUST be rechecked. In most cases, full recalibration (see procedure in Paragraph 5.4) will be required. Similarly, if the RF Probe supplied with the instrument is exchanged for a Model 91-4C Low Frequency Probe, recalibration will be required (see Paragraph 3.5).

5.5.6 Probe Tests

The probe and probe accessories furnished with the RF Millivoltmeter can be checked for VSWR and frequency response using the procedures detailed in the paragraphs which follow.

Should a probe exhibit out-of-tolerance performance in these tests, the user is urged not to attempt to repair it, but to send it back to the factory for repair or adjustment.

A. VSWR

1. Test Equipment

a. Generator for the desired frequency range. Suggested Signal sources are:

125 kHz - 175 MHz, Boonton Model 103A, or 103B

450 kHz - 520 MHz, Boonton Model 102C, or 102D

10 MHz - 1400 MHz, Wavetek Model 2001

b. Slotted line: GR Type 900 LB

c. Detector: GR Type 1241, or Boonton RF Millivoltmeter, 92B or 92C

2. Test Procedure

a. Connect the slotted line to a proper signal source, and terminate the line with the device to be tested, i.e., Boonton Model 91-14A Tee Adapter and Boonton Boonton Model 91-15A 50 Ω Termination, or Boonton Model 91-8B 50 Ω Adapter.

It is necessary that the probe and RF Millivoltmeter be connected to whichever accessory is being tested. The probe supplies a perturbation for which the accessory was designed, and which it needs, to meet its specification, and the millivoltmeter permits the test level to be set to the desired value.

b. Move the carriage of the slotted line to a point of minimum voltage, then to a point of maximum voltage, and record the values.

c. The VSWR is the ratio of the maximum and minimum voltages. The measurement can be repeated at other frequencies and levels, as required.

B. Frequency Response

The most accurate method of measuring the frequency response of the RF Probe for the RF Millivoltmeter is through the use of micropotentiometers, electrothermic ac-dc transfer instruments, and A-T (attenuator-thermoelement) voltmeters. Users who have these instruments available will be familiar with their application.

A method of suitable accuracy, compatible with the accuracy of the Model 92BD, uses a point by point frequency scan in conjunction with a power divider and calibrated power meter. The method is detailed in the following paragraphs.

1. Test Equipment

a. Signal source for the frequency range of 10 to 1200 MHz. Suggested instrument is Wavetek Model 2001, 10 - 1400 MHz. In this application the generator is manually swept.

b. Power Divider, Weinschel Model 1870A

c. Calibrated RF Power Meter, Boonton Model 42B/BD, or H-P Model 435A

2. Test Procedure

a. Connect the equipment as shown in Figure 10.

b. Set the frequency of the generator to 10 MHz, and adjust the output control for the desired test level. If the response is to be measured at one level, only, a test voltage of 100 or 200 mV is recommended.

c. Disable the output of the generator momentarily and zero the power meter. Re-establish the output level and note the reading on the power meter. Record the frequency of the generator and the reading of the 92BD RF Millivoltmeter. Change the frequency, in whatever increments are desired, through the range of 10 to 1200 MHz, holding the reference reading on the power meter constant.

d. Reverse the output ports of the power divider and repeat Step c.

e. The correct voltmeter reading is obtained at each frequency by averaging the two readings. This virtually eliminates the influence of frequency differences of the two ports of the power divider.

f. Further refinements can be made by filtering the output of the generator, and measuring the complex reflection coefficients of the power meter, rf millivoltmeter accessory under test, and all ports of the power divider. The usual corrections can then be made. These procedures are not usually necessary, and should be done only if the additional accuracy is warranted.

C. <u>Frequency Response and VSWR</u>

An alternate method of measuring both the frequency response and the VSWR (in terms of the reflection coefficient), but with somewhat reduced accuracy, employs a sweep generator, VSWR bridge, external levelling of the generator, power divider, and sensitive oscilloscope.

1. Test Equipment

a. Sweep Generator, Wavetek Model 2001, 10 - 1400 MHz

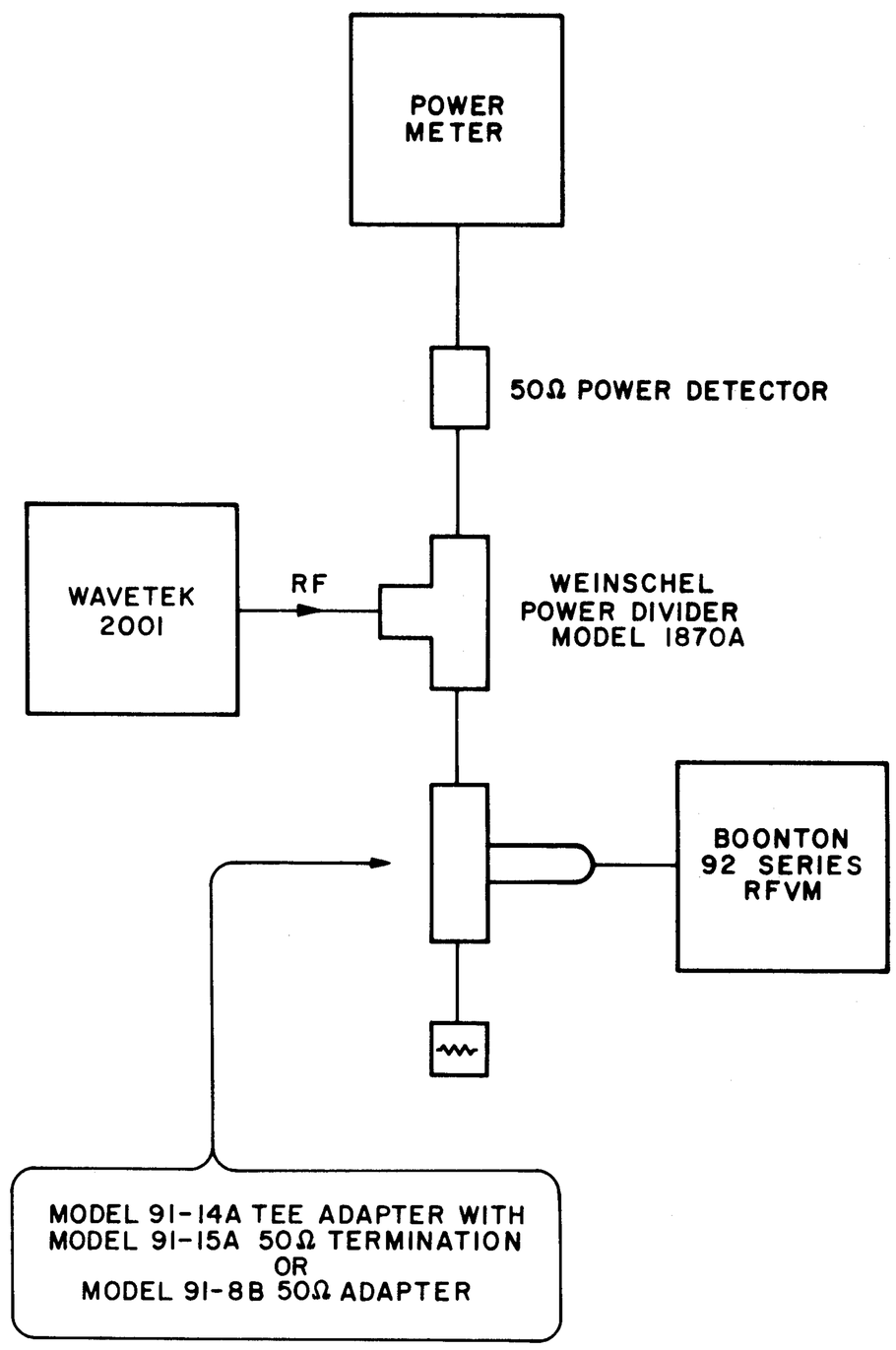

Figure 10. Frequency Response Test Setup

b. SWR Autotester, Wiltron Model 63N50

c. Oscilloscope, Tektronix Model 5100, with two 5A20 Vertical Amplifiers

d. Power Divider, Weinschel Model 1870A

e. Standard 1.2:1 Mismatch Termination, Weinschel Model M1410-1.2

2. Test Procedure

a. Connect the equipment as shown in Figure 11, and temporarily connect the probe under test to the RF Millivoltmeter. Adjust the output control of the sweep generator for a reading on the 92BD of 100 mV at a fixed frequency of 100 MHz.

b. Calibrate one of the vertical input amplifiers of the oscilloscope for a sensitivity of 100 μV/div. The other vertical amplifier should be calibrated so that a change from 100 mV to 90 mV applied to the input of the probe under test will

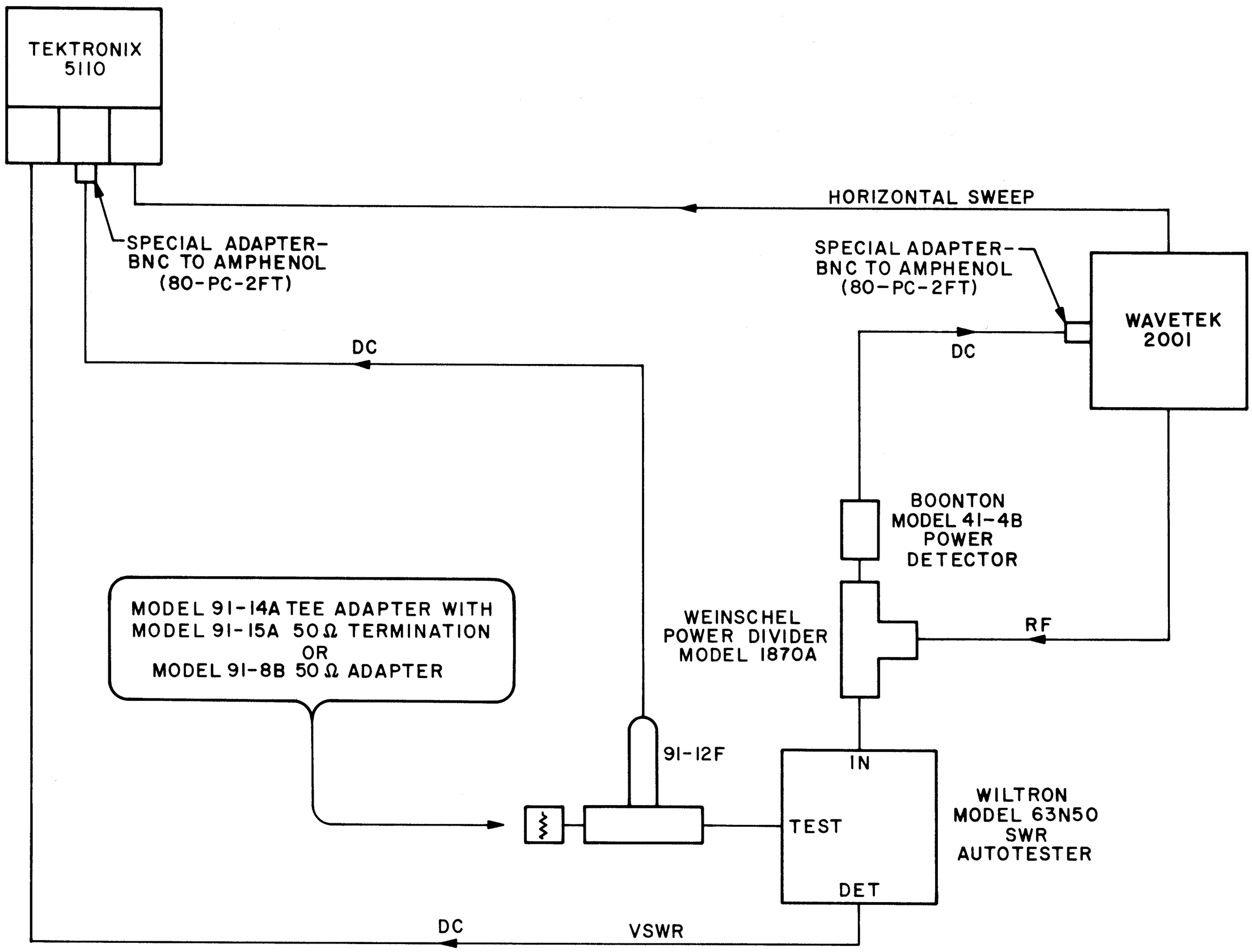

Figure 11. Swept Frequency Response Test Setup

produce a vertical deflection of one division. This can be done easily if a Boonton Model 26A RF Millivoltmeter Calibrator is available. The probe should be temporarily connected to the output of the calibrator while output levels of 100 mV and 90 mV are alternately selected, and the sensitivity of the second input amplifier is adjusted for a deflection of one division.

c. Substitute the Standard 1.2:1 Mismatch Termination for the accessory under test, and calibrate the graticule of the oscilloscope for a VSWR of 1.2. Replace the accessory and probe.

d. Adjust the limits on the three bands of the sweep generator for coverage from 10 to 1200 MHz. Study the traces for both frequency response and VSWR (return loss).

e. Reverse the output ports of the power divider and repeat Steps c and d.

f. It should be noted that the permissible error for the frequency response trace expands with frequency. For the most meaningful results, the graticule should be marked with a grease pencil, showing the maximum permissible errors for the various frequency bands, as determined with a calibrated signal of, say, 1 MHz, and at levels above and below the selected test level. It is important to note that the recovered dc from the rf probe, which is applied to the second vertical amplifier, will vary as the square of the rf input level for test levels of 30 mV, or less. Above 30 mV the rf to dc conversion gradually changes from square law to linear, and approaches a peak-to-peak rectifier at an input of 3 volts.

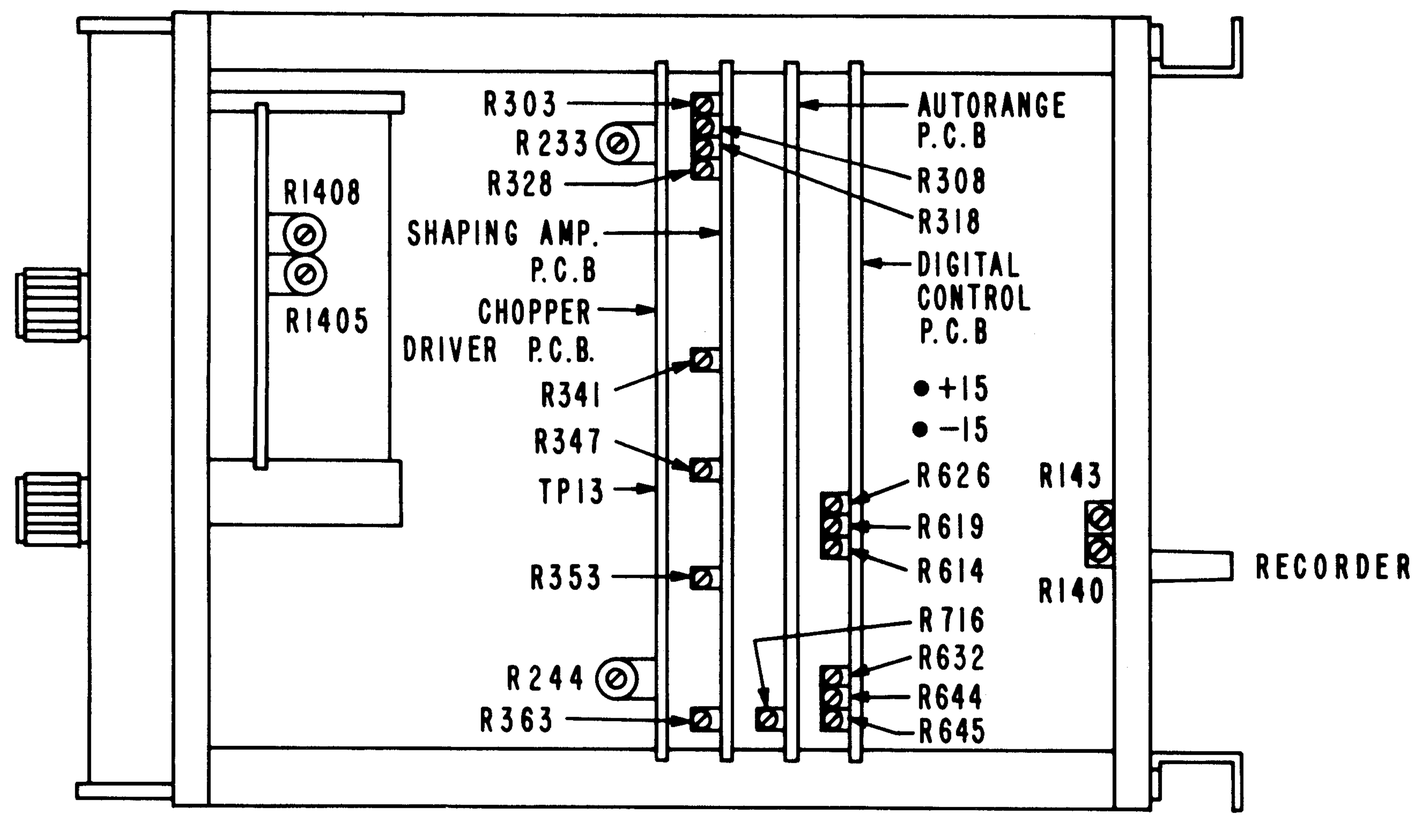

• TEST POINT
+ REPEAT STEP #4
✳ INSTRUMENTS WITH dB OPTION ONLY

ADJ NO	CONT	FUNCTION	RANGE	INPUT ±0.2%	ADJUST
1	R143	−15V ADJ	—	0	−15.0V ±0.1V AT −15V TP
2	R140	+15V ADJ	—	0	+15.0V ±0.1V AT +15V TP
3	R244	CHOPPER FREQUENCY	1000 mV	1000 mV	94 ±1Hz AT TP 13
4	R401	FRONT PANEL ZERO	1 mV	0	AVERAGE ZERO INDICATION AT RECORDER TERMINALS
5	R233	DC ZERO	30 mV	0	ZERO INDICATION AT RECORDER TERMINALS
6	R353	RANGE ADJ	1000 mV	1000 mV	+10.00V AT RECORDER TERMINALS DC VOLTMETER INPUT > 10 MEGOHMS
7	R645	1 DIVIDER	1000 mV	1000 mV	0.500V AT PIN 8 OF IC606
8	R363	RANGE ADJ	3000 mV	3000 mV	+9.487V AT RECORDER TERMINALS DC VOLTMETER INPUT > 10 MEGOHMS
9a	R632	3 DIVIDER	3000 mV	3000 mV	1.500V AT PIN 11 OF IC606
9b	R1405	+ DPM FS ADJ	3000 mV	3000 mV	3000 mV INDICATION
10 +	R303	RANGE ADJ	1 mV	1 mV	1.000 mV INDICATION
11 +	R308	RANGE ADJ	3 mV	3 mV	3.000 mV INDICATION
12 +	R318	RANGE ADJ	10 mV	10 mV	10.00 mV INDICATION
13	R328	RANGE ADJ	30 mV	30 mV	30.00 mV INDICATION
14	R341	RANGE ADJ	100 mV	100 mV	100.0 mV INDICATION
15	R347	RANGE ADJ	300 mV	300 mV	300.0 mV INDICATION
16	R716	AUTORANGE TRIP ADJ	AUTO	1000 − 1100 mV	TRIP TO 3000 mV RANGE AT 1030 mV
17	R644	EDGEMETER ADJ	300 mV 300 mV 1000 mV	224 mV 274 mV 1000 mV	ZERO dBm INDICATION (50 OHMS REF) ZERO dBm INDICATION (75 OHMS REF) ZERO dBV INDICATION
18	R1408	−DPM FS ADJ ✳	3000 mV	−6.000 VDC	−60.00 dBm INDICATION
19	R614	dB REFERENCE ✳	3000 mV 3000 mV 1000 mV	7.071 VDC 8.660 VDC 10.00 VDC	ADJUST FOR +20.0 dBm (50 OHMS REF) ADJUST FOR +20.0 dBm (75 OHMS REF) ADJUST FOR 0.0 dBV
	R626 R619	dB RANGING dB LINEARITY ✳	−50 dBm 0 dBm	7.071 VDC 3.162 VDC	70 dB SPREAD BETWEEN +20 AND −50 dBm 10 dB SPREAD BETWEEN 0 AND −10 dBm

Figure 12. Calibration Instructions

VI. INTERFACE INFORMATION

6.1 PROGRAMMING INPUTS

Pin No.	Function	Comment	Command	Unit Loading
7	Man. disable	Disables front panel range selection.	0	0.1
8	dBm enable	Selects dBm display*	0	0.1
6	Auto enable	Selects automatic ranging*	0	0.1
16	1 mV range	Selects range provided manual disable has also been selected, and autorange has not been selected; selecting more than one range will result in incorrect indications. Range lines must be deselected for either manual or auto ranging.	0	0.1
15	3 mV "		0	0.1
14	10 mV "		0	0.1
13	30 mV "		0	0.1
12	100 mV "		0	0.1
11	300 mV "		0	0.1
10	1 V "		0	0.1
9	3 V "		0	0.1
X	Encode hold	Holds display	0	0.2
V	Encode trigger	Starts encode cycle	(See 5.1.3)	0.1

*Assumes that Man. Disable has also be selected

6.1.1 Input Characteristics

TTL Series	Logic Level	Voltage Level	Current per Unit Load
Standard Power 54/74	0	≤ 0.7 V	-1.6 mA*
	1	2.4 to 5.25 V	40 μA

*The "-" current indicates current out of the input (external command device must sink this current). A standard power (Series 54/74) TTL output will sink and source 10 unit loads.

6.1.2 Input Pull-Up

All input terminals have internal pull-up. The current sourced by this pull-up when the input is brought to a logic level 0 is included in the loading shown in the "Unit Loading" column of the chart in 6.1.

6.1.3 Triggering

To trigger an encode cycle, the trigger line must be transferred from logic "1" to logic "0". Limits for trigger pulse characteristics are shown in 6.3.1.

6.2 DATA OUTPUTS

Pin No.	Function	Comment	True Logic Level	54/74 Unit Load
22	mV Mode	Indicates voltage display	1	1
4	DC Analog	10 V for full scale of "1" ranges; 9.5 V on "3" ranges	n/a	n/a
21	Overrange	Indicates that instrument range should be increased	0	1
20	Und. Range	Indicates that instrument range should be decreased	0	1
2	-dBm	Indicates that dBm is below ref. level	1	1
W	Encode Complete	Indicates completion of encode cycle; data output may be read.	1	1
17	4	Indicates range selected in binary code;	1	1
18	2 range	0 = 1 mV range, 7 = 3000 mV range		
19	1 code			
F	8	Data in serial form, continuously scanned,	1	1
E	4 BCD	left (MSD) to right, 500 μs/digit, 2 ms	1	1
D	2 enc.	scan	1	1
C	1 data		1	1

DATA OUTPUTS (Continued)

Pin No.	Function	Comment	True Logic Level	54/74 Unit Load
H	4	Indicates digit to which BCD data applies;	1	1
J	3 Digit	4 = MSD (left-most)	1	1
K	2 Select		1	1
L	1		1	1

6.2.1 Output Characteristics

TTL Series	Logic Level	Voltage Level	Current per Unit Load
Standard Power 54/74	0	≤ 0.7 V	1.6 mA*
	1	2.4 to 5.25 V	-40 μA

*The "-" current indicates current sourced by output.

6.2.2 Analog Output

Source resistance is 9 kΩ.

6.3 WAVEFORMS

6.3.1 Encode Trigger

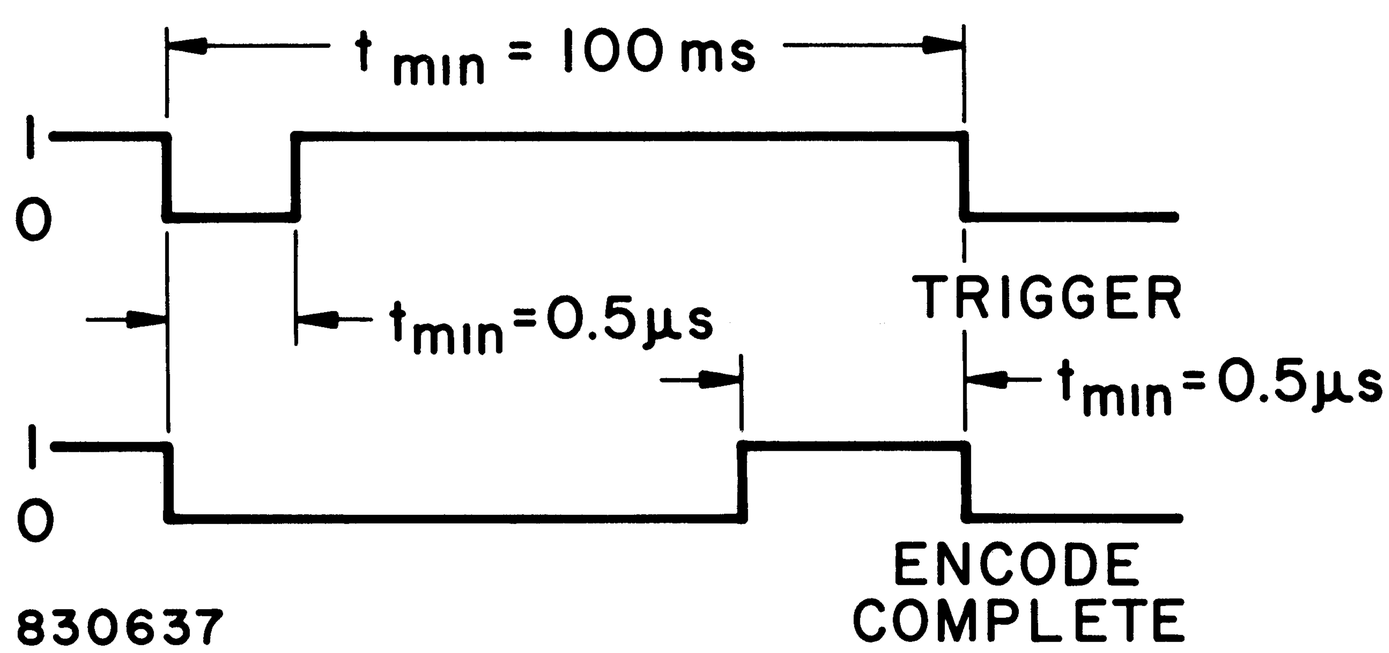

6.3.2 Data Output Timing

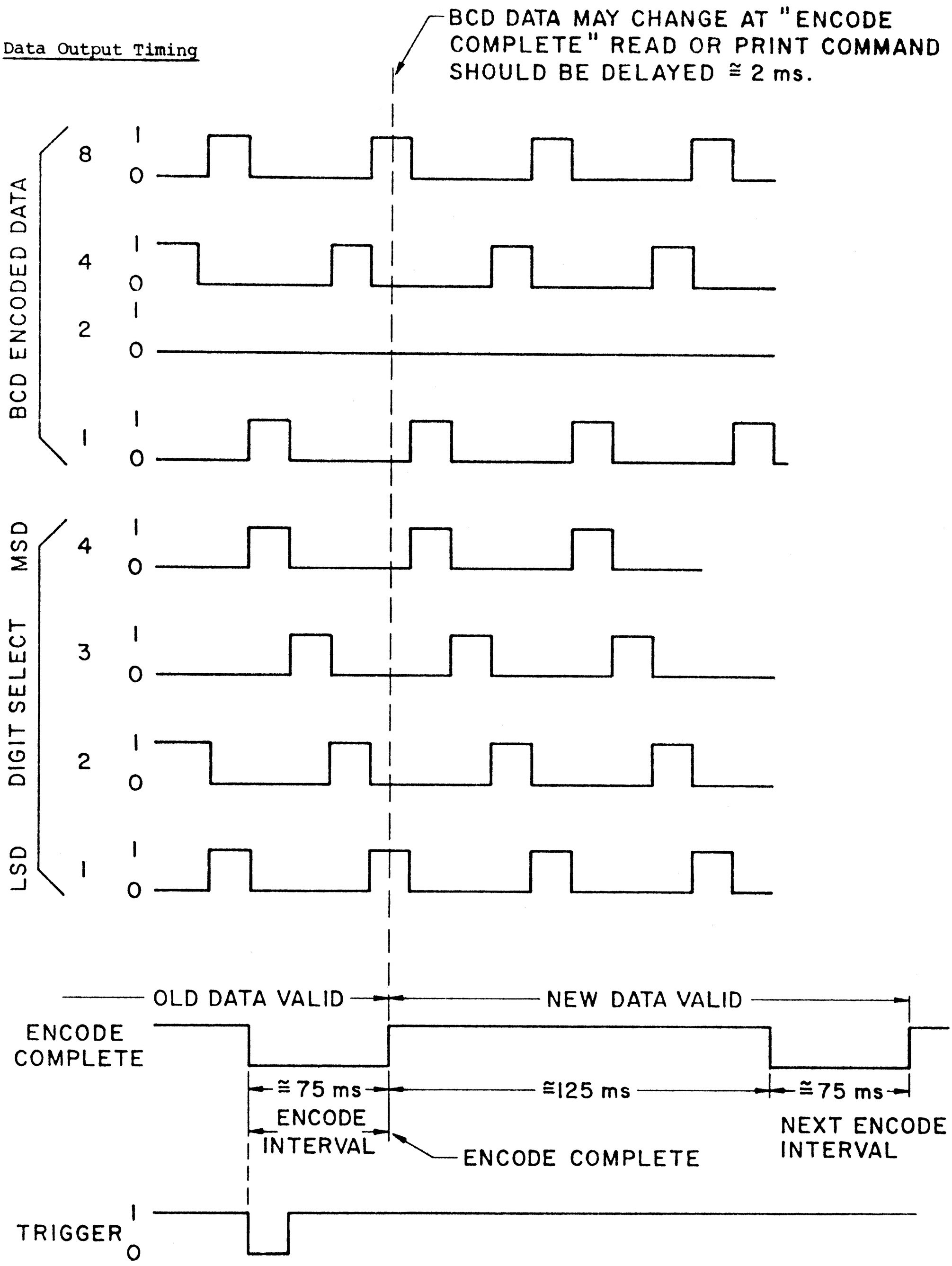

NOTE:
BCD DATA INDICATED: "1048"

6.4 AUTORANGING CHARACTERISTICS

6.4.1 Instrument upranges at approximately 107% of full scale.

6.4.2 Instrument downranges at approximately 28% of full scale.

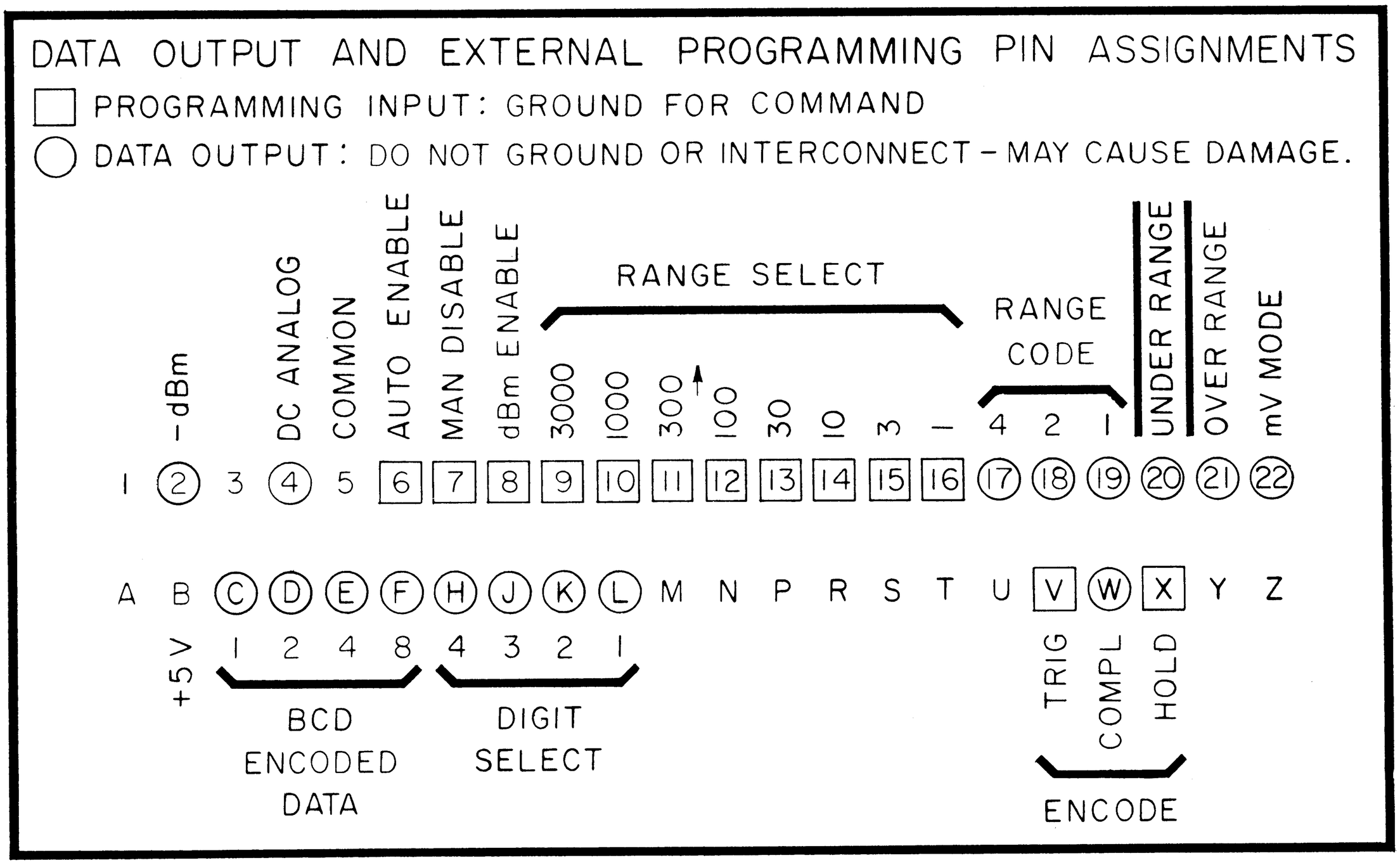

Figure 13. External Connections

TABLE OF REPLACEABLE PARTS

Reference		Description	BEC Part No.
		AMPLIFIER PC BOARD	
C101	Capacitor, PE	100 nF 10% 200 V	234005
C102	Capacitor, Elec.	10 µF 20% 20 V	283205
C103	Capacitor, Mica	100 pF 5% 500 V	200001
C104	Capacitor, Elec.	10 µF 20% 20 V	283205
C105	Capacitor, Elec.	33 µF 20% 15 V	283206
C106	Capacitor, Elec.	10 µF 20% 20 V	283205
C107	Capacitor, Met.	1.0 µF 20% 100 V	236007
C108	Capacitor, Elec.	1.0 µF 20% 35 V	283199
C109	Capacitor, Elec.	50 µF +75%/-10% 25 V	283159
C110	Capacitor, Elec.	50 µF +75%/-10% 25 V	283159
C111	Capacitor, PE	100 nF 10% 200 V	234005
C112	Capacitor, Elec.	250 µF 40 V	283207
C113	Capacitor, Elec.	250 µF 40 V	283207
C114	Capacitor, Elec.	1000 µF +150%/-10% 15 V	283221
C115	Capacitor, Cer.	0.001 µF GMV 500 V	224114
C116	Capacitor, Cer.	0.001 µF GMV 500 V	224114
C117	Capacitor, Elec.	10 µF 20% 20 V	283205
C118	Capacitor, Elec.	100 µF +75%/-10% 25 V	283105
C119	Capacitor, Elec.	100 µF +75%/-10% 25 V	283105
CR101	Diode, Sig.	FDH-300	530052
CR102	Diode, Sig.	1N914	530058
CR103	Diode, Sig.	1N914	530058
CR104	Diode, Zener	1N5243B (13 V)	530101
CR105	Diode, Zener	1N5235B (6.8 V)	530089
CR106 through CR110	Diode, Sig.	1N914	530058
CR111	Bridge, Rectifier	KBP-02	532013
CR112	Bridge, Rectifier	KBP-02	532013
CR113	Bridge, Rectifier	KBP-02	532013
CR114 through CR125	Diode, Sig.	1N914	530058
IC101	Voltage Regulator	µA7805UC	535011
IC102	Voltage Regulator	µA7805UC	535011
IC103	Voltage Regulator	µA7805UC	535011
IC104	Voltage Regulator	LM723CN	535037
IC105	Voltage Regulator	LM723CN	535037
IC106	Integrated Circuit	SN74L00N (NAND Gate)	534002
J101	Connector, PC	Amphenol 143-022-03 (22 Pin)	479231
J102	Connector, PC	Amphenol 143-022-03 (22 Pin)	479231
J103	Connector, PC	Amphenol 143-022-03 (22 Pin)	479231
J104	Connector, PC	Amphenol 225-22221-103 (44 Pin)	479254
Q101	Transistor, FET	2N5949	528019
Q102	Transistor, FET	2N5949	528019
Q103	Transistor, FET	3N161	528132
Q104	Transistor, FET	2N5949	528019
Q105	Transistor, FET	TIS58	528038
Q106	Transistor, FET	HDGP1001	528057
Q107	Transistor, FET	3N161	528132
Q108	Transistor, FET	2N5949	528019

Reference	Description		BEC Part No.
	AMPLIFIER PC BOARD (CONTINUED)		
Q109	Transistor, FET	Selected	528044
Q110	Transistor, NPN	2N5088	528047
Q111	Transistor, PNP	2N5087	528042
Q112	Transistor, NPN-PNP	D39C2	528048
Q113	Transistor, PNP	2N5087	528042
Q114	Transistor, NPN	2N5088	528047
Q115	Transistor, FET	TIS58	528038
Q116	Transistor, FET	TIS58	528038
Q117	Transistor, FET	TIS58	528038
Q118	Transistor, FET	2N5949	528019
Q119	Transistor, FET	2N5949	528019
Q120	Transistor, FET	2N5949	528019
Q121	Transistor, NPN-PNP	D39C2	528048
Q122 through Q132	Transistor, PNP	MPS6516	528037
R101	Resistor, Comp.	1 MΩ 5%	344600
R102	Resistor, Comp.	6.2 kΩ 5%	343376
R103	Resistor, Comp.	6.2 kΩ 5%	343376
R104	Resistor, MF	5.62 MΩ 1% 1/4 W	325397
R105	Resistor, MF	24.3 kΩ 1%	341437
R106	Resistor, MF	80.6 kΩ 1%	341487
R107	Resistor, MF	374 kΩ 1%	341555
R108	Resistor, MF	294 kΩ 1%	341545
R109	Resistor, MF	1.0 MΩ 1%	342600
R110	Resistor, Comp.	91 kΩ 5%	344492
R111	Resistor, Comp.	47 kΩ 5%	344465
R112	Resistor, Comp.	33 kΩ 5%	344450
R113	Resistor, Comp.	300 kΩ 5%	344546
R114	Resistor, MF	169 Ω 1%	341222
R115	Resistor, Comp.	10 kΩ 5%	344400
R116	Resistor, Comp.	10 kΩ 5%	344400
R117	Resistor, Comp.	33 kΩ 5%	344450
R118	Resistor, MF	15.0 kΩ 1%	341417
R119	Resistor, Comp.	15 kΩ 5%	344417
R120	Resistor, Comp.	3.6 kΩ 5%	344353
R121	Resistor, Comp.	3 kΩ 5%	344346
R122	Resistor, Comp.	1 MΩ 5%	344600
R123	Resistor, Comp.	2.7 kΩ 5%	344341
R124	Resistor, Comp.	5.6 kΩ 5%	344372
R125	Resistor, Comp.	5.6 kΩ 5%	344372
R126	Resistor, Comp.	1 kΩ 5%	344300
R127	Resistor, Comp.	5.1 kΩ 5%	344368
R128	Resistor, Comp.	15 kΩ 5%	344417
R129	Resistor, Comp.	1 kΩ 5%	344300
R130	Resistor, Comp.	10 kΩ 5%	344400
R131	Resistor, MF	30.1 kΩ 1%	341446
R132	Resistor, MF	3.01 kΩ 1%	341346
R133	Resistor, MF	301 Ω 1%	341246
R134	Resistor, MF	33.2 Ω 1%	341150
R135	Resistor, Comp.	1 MΩ 5%	344600
R136	Resistor, Comp.	1 kΩ 5%	343300
R137	Resistor, Comp.	1 kΩ 5%	343300
R138	Resistor, Comp.	15 kΩ 5%	344417
R139	Resistor, MF	3.32 kΩ 1%	341350
R140	Resistor, Var.	1 kΩ 10% 0.5 W	311316
R141	Resistor, MF	3.01 kΩ 1%	341346

Reference	Description		BEC Part No.
		AMPLIFIER PC BOARD (CONTINUED)	
R142	Resistor, MF	3.32 kΩ 1%	341350
R143	Resistor, Var.	1 kΩ 10% 0.5 W	311316
R144	Resistor, MF	3.01 kΩ 1%	341346
R145	Resistor, MF	9.09 kΩ 1%	341392
R146	Resistor, Comp.	160 kΩ 5%	343520
R147	Resistor, Comp.	39 kΩ 5%	343457
R148	Resistor, Comp.	100 kΩ 5%	343500
R149	Resistor, Comp.	160 kΩ 5%	343520
R150	Resistor, Comp.	39 kΩ 5%	343457
R151	Resistor, Comp.	100 kΩ 5%	343500
R152	Resistor, Comp.	160 kΩ 5%	343520
R153	Resistor, Comp.	39 kΩ 5%	343457
R154	Resistor, Comp.	100 kΩ 5%	343500
R155	Resistor, Comp.	160 kΩ 5%	343520
R156	Resistor, Comp.	39 kΩ 5%	343457
R157	Resistor, Comp.	100 kΩ 5%	343500
R158	Resistor, Comp.	160 kΩ 5%	343520
R159	Resistor, Comp.	39 kΩ 5%	343457
R160	Resistor, Comp.	100 kΩ 5%	343500
R161	Resistor, Comp.	160 kΩ 5%	343520
R162	Resistor, Comp.	39 kΩ 5%	343457
R163	Resistor, Comp.	100 kΩ 5%	343500
R164	Resistor, Comp.	160 kΩ 5%	343520
R165	Resistor, Comp.	39 kΩ 5%	343457
R166	Resistor, Comp.	100 kΩ 5%	343500
R167	Resistor, Comp.	160 kΩ 5%	343520
R168	Resistor, Comp.	39 kΩ 5%	343457
R169	Resistor, Comp.	100 kΩ 5%	343500
R170	Resistor, Comp.	160 kΩ 5%	343520
R171	Resistor, Comp.	39 kΩ 5%	343457
R172	Resistor, Comp.	100 kΩ 5%	343500
R173	Resistor, Comp.	160 kΩ 5%	343520
R174	Resistor, Comp.	39 kΩ 5%	343457
R175	Resistor, Comp.	100 kΩ 5%	343500
R176	Resistor, Comp.	160 kΩ 5%	343520
R177	Resistor, Comp.	39 kΩ 5%	343457
R178	Resistor, Comp.	100 kΩ 5%	343500
R179	Not Used		
R180	Not Used		
R181	Resistor, Comp.	1.8 kΩ 5%	343325
R182	Resistor, Comp.	1.8 kΩ 5%	343325
R183	Resistor, Comp.	4.7 kΩ 5%	343365
		CHOPPER DRIVER PC BOARD	
A201	Op. Amp.	LM310H	535005
C201	Capacitor, PC	100 nF 10% 50 V	234046
C202	Capacitor, PE	6.8 nF 10% 200 V	234044
C203	Capacitor, Mica	100 pF 5% 500 V	200001
C204	Capacitor, Mica	100 pF 5% 500 V	200001
C205	Capacitor, PE	22 nF 10% 200 V	230101
C206	Capacitor, PC	100 nF 10% 50 V	234046
C207	Capacitor, Mica	100 pF 5% 500 V	200001
C208	Capacitor, PC	100 nF 10% 50 V	234046
C209	Capacitor, Cer.	10 nF 100 V	224119
C210	Capacitor, Cer.	10 nF 100 V	224119
C211	Capacitor, PE	22 nF 10% 200 V	230101

Reference	Description		BEC Part No.
	CHOPPER DRIVER PC BOARD (CONTINUED)		
C212	Capacitor, PC	470 nF 10% 50 V	234128
C213	Capacitor, Mica	100 pF 5% 500 V	200001
C214	Capacitor, Elec.	50 µF +75%/-10% 25 V	283159
C215	Capacitor, Elec.	50 µF +75%/-10% 25 V	283159
C216	Capacitor, Elec.	50 µF +75%/-10% 25 V	283159
C217	Capacitor, Elec.	150 µF +75%/-10% 15 V	283307
CR201 through CR218	Diode, Sig.	1N914	530058
CR219	Diode, Sig.	FDH-300	530052
Q201	Transistor, Uni.	2N4871	528051
Q202	Transistor, NPN	MPS-A20	528043
Q203	Transistor, PNP	2N5087	528042
Q204	Transistor, NPN	2N5088	528047
Q205	Transistor, NPN	MPS-A20	528043
Q206	Transistor, FET	MPS-A12	528052
Q207	Transistor, NPN	MPS-A20	528043
Q208	Transistor, FET	Selected	528093
Q209	Transistor, NPN	MPS-A20	528043
Q210	Transistor, FET	Selected	528093
Q211	Transistor, FET	2N5949	528019
Q212	Transistor, NPN	MPS-A20	528043
Q213	Transistor, NPN	2N5308	528050
Q214	Transistor, NPN	2N5308	528050
R201	Resistor, Comp.	10 kΩ 5%	344400
R202	Resistor, Comp.	22 kΩ 5%	344433
R203	Resistor, Comp.	10 kΩ 5%	344400
R204	Resistor, Comp.	100 Ω 5%	344200
R205	Resistor, Comp.	33 kΩ 5%	344450
R206	Resistor, Comp.	10 kΩ 5%	344400
R207	Resistor, Comp.	100 kΩ 5%	344500
R208	Resistor, Comp.	3.3 kΩ 5%	344350
R209	Resistor, Comp.	4.7 kΩ 5%	344365
R210	Resistor, Comp.	10 kΩ 5%	344400
R211	Resistor, Comp.	150 kΩ 5%	344517
R212	Resistor, Comp.	10 kΩ 5%	344400
R213	Resistor, Comp.	10 kΩ 5%	344400
R214	Resistor, Comp.	22 kΩ 5%	344433
R215	Resistor, Comp.	10 kΩ 5%	344400
R216	Resistor, Comp.	270 kΩ 5%	344541
R217	Resistor, Comp.	240 kΩ 5%	344537
R218	Resistor, Comp.	10 kΩ 5%	344400
R219	Resistor, Comp.	15 kΩ 5%	344417
R220	Resistor, Comp.	10 kΩ 5%	344400
R221	Resistor, Comp.	10 kΩ 5%	344400
R222	Resistor, Comp.	10 kΩ 5%	344400
R223	Resistor, Comp.	4.7 kΩ 5%	344365
R224	Resistor, Comp.	12 kΩ 5%	344408
R225	Resistor, Comp.	100 kΩ 5%	344500
R226	Resistor, Comp.	100 kΩ 5%	344500
R227	Resistor, Comp.	15 kΩ 5%	344417
R228	Resistor, Comp.	10 kΩ 5%	344400
R229	Resistor, Comp.	100 kΩ 5%	344500
R230	Resistor, Comp.	12 kΩ 5%	344408
R231	Resistor, Comp.	4.7 kΩ 5%	344365

Reference	Description		BEC Part No.
	CHOPPER DRIVER PC BOARD (CONTINUED)		
R232	Resistor, Comp.	100 kΩ 5%	344500
R233	Resistor, Var.	2 kΩ 20% 1/2 W	311285
R234	Resistor, Comp.	100 kΩ 5%	344500
R235	Resistor, Comp.	100 kΩ 5%	344500
R236	Resistor, Comp.	27 kΩ 5%	344441
R237	Resistor, Comp.	100 kΩ 5%	344500
R238	Resistor, Comp.	100 kΩ 5%	344500
R239	Resistor, Comp.	1.6 kΩ 5%	344320
R240	Resistor, Comp.	300 Ω 5%	344246
R241	Resistor, Comp.	200 Ω 5% 1 W	302082
R242	Resistor, Comp.	150 kΩ 5%	344517
R243	Resistor, Comp.	510 kΩ 5%	344568
R244	Resistor, Var.	50 kΩ 20% 1/2 W	311282
R245	Resistor, Comp.	47 Ω 5%	344165
	SHAPING AMPLIFIER PC BOARD		
A301	Op. Amp.	LM301AN	535012
C301	Capacitor, Cer.	10 nF 100 V	224119
C302	Capacitor, Mica	33 pF 5% 500 V	200049
C303	Capacitor, Cer.	10 nF 100 V	224119
CR301 through CR308	Diode, Sig.	1N914	530058
Q301	Transistor, FET	2N5949	528019
Q302	Transistor, FET	2N5949	528019
Q303	Transistor, FET	2N5949	528019
Q304	Transistor, PNP	2N5087	528042
Q305	Transistor, FET	2N5949	528019
Q306	Transistor, PNP	2N5087	528042
Q307	Transistor, FET	2N5949	528019
Q308	Transistor, PNP	2N5087	528042
Q309	Transistor, FET	2N5949	528019
Q310	Transistor, PNP	2N5087	528042
Q311	Transistor, FET	2N5949	528019
Q312	Transistor, PNP	2N5087	528042
Q313	Transistor, FET	2N5949	528019
Q314	Transistor, FET	2N5949	528019
Q315	Transistor, FET	2N5949	528019
Q316	Transistor, FET	2N5949	528019
Q317	Transistor, PNP	2N5087	528042
Q318	Transistor, NPN	2N5088	528047
Q319	Transistor, PNP	2N5087	528042
Q320	Transistor, NPN	2N5088	528047
Q321	Transistor, PNP	2N5087	528042
Q322	Transistor, PNP	2N5087	528042
Q323	Transistor, FET	2N5949	528019
Q324	Transistor, FET	2N5949	528019
Q325	Transistor, PNP	2N5087	528042
Q326	Transistor, FET	2N5949	528019
Q327	Transistor, PNP	2N5087	528042
Q328	Transistor, FET	2N5949	528019
Q329	Transistor, PNP	2N5087	528042
Q330	Transistor, FET	2N5949	528019
Q331	Transistor, FET	2N5949	528019

Reference	Description		BEC Part No.
	SHAPING AMPLIFIER PC BOARD (CONTINUED)		
Q332	Transistor, PNP	2N5087	528042
Q333	Transistor, PNP	2N5087	528042
Q334	Transistor, PNP	2N5087	528042
Q335	Transistor, FET	2N5949	528019
Q336	Transistor, FET	2N5949	528019
Q337	Transistor, PNP	2N5087	528042
Q338	Transistor, PNP	2N5087	528042
Q339	Transistor, PNP	2N5087	528042
R301	Resistor, Comp.	130 Ω 5%	344211
R302	Resistor, Comp.	4.7 MΩ 5%	344665
R303	Resistor, Var.	1 kΩ 10% 1 W	311256
R304	Resistor, MF	10 kΩ 1%	341400
R305	Resistor, Comp.	4.7 MΩ 5%	344665
R306	Resistor, MF	51.1 kΩ 1%	341468
R307	Resistor, MF	2.49 kΩ 1%	341338
R308	Resistor, Var.	1 kΩ 10% 1 W	311256
R309	Resistor, MF	28.7 kΩ 1%	341444
R310	Resistor, MF	200 kΩ 1%	341529
R311	Resistor, MF	100 kΩ 1%	341500
R312	Resistor, MF	40.2 kΩ 1%	341458
R313	Resistor, MF	191 kΩ 1%	341527
R314	Resistor, MF	11 kΩ 1%	341404
R315	Resistor, Comp.	4.7 MΩ 5%	344665
R316	Resistor, MF	29.4 kΩ 1%	341445
R317	Resistor, MF	95.3 kΩ 1%	341494
R318	Resistor, Var.	1 kΩ 10% 1 W	311256
R319	Resistor, MF	28.0 kΩ 1%	341443
R320	Resistor, MF	64.9 kΩ 1%	341478
R321	Resistor, MF	1.00 MΩ 1%	342600
R322	Resistor, MF	26.1 kΩ 1%	341440
R323	Resistor, MF	46.4 kΩ 1%	341464
R324	Resistor, MF	10 kΩ 1%	341400
R325	Resistor, Comp.	4.7 MΩ 5%	344665
R326	Resistor, MF	45.3 kΩ 1%	341463
R327	Resistor, MF	2.49 kΩ 1%	341338
R328	Resistor, Var.	1 kΩ 10% 1 W	311256
R329	Resistor, Comp.	270 kΩ 5%	344541
R330	Resistor, MF	21.5 kΩ 1%	341432
R331	Resistor, MF	237 kΩ 1%	341536
R332	Resistor, Comp.	18 kΩ 5%	344425
R333	Resistor, MF	26.1 kΩ 1%	341440
R334	Resistor, MF	154 kΩ 1%	341518
R335	Resistor, Comp.	47 kΩ 5%	344465
R336	Resistor, MF	54.9 kΩ 1%	341471
R337	Resistor, MF	191 kΩ 1%	341527
R338	Resistor, Comp.	4.7 MΩ 5%	344665
R339	Resistor, MF	82.5 kΩ 1%	341488
R340	Resistor, MF	178 kΩ 1%	341524
R341	Resistor, Var.	1 kΩ 10% 1 W	311256
R342	Resistor, MF	17.8 kΩ 1%	341424
R343	Resistor, MF	2.74 kΩ 1%	341342
R344	Resistor, Comp.	4.7 MΩ 5%	344665
R345	Resistor, MF	24.3 kΩ 1%	341437
R346	Resistor, MF	232 kΩ 1%	341535
R347	Resistor, Var.	1 kΩ 10% 1 W	311256
R348	Resistor, MF	95.3 kΩ 1%	341494
R349	Resistor, MF	453 kΩ 1%	341563

Reference	Description		BEC Part No.
	SHAPING AMPLIFIER PC BOARD (CONTINUED)		
R350	Resistor, Comp.	4.7 MΩ 5%	344665
R351	Resistor, MF	200 kΩ 1%	341529
R352	Resistor, MF	634 kΩ 1%	342577
R353	Resistor, Var.	1 kΩ 10% 1 W	311256
R354	Resistor, MF	14.3 kΩ 1%	341415
R355	Resistor, MF	2.49 kΩ 1%	341338
R356	Resistor, MF	34.8 kΩ 1%	341452
R357	Resistor, MF	523 kΩ 1%	342569
R358	Resistor, Comp.	4.7 MΩ 5%	344665
R359	Resistor, MF	162 kΩ 1%	341520
R360	Resistor, MF	806 kΩ 1%	342587
R361	Resistor, MF	10 kΩ 1%	341400
R362	Resistor, MF	2.74 kΩ 1%	341342
R363	Resistor, Var.	1 kΩ 10% 1 W	311256
R364	Resistor, MF	127 kΩ 1%	341510
R365	Resistor, MF	604 kΩ 1%	342575
RT301	Thermistor	100 Ω 10%	325005
	CHOPPER SOCKET, REAR PANEL, SUB PANEL		
C401	Capacitor, Mylar	100 nF 10% 50 V	234046
C402	Capacitor, Mylar	100 nF 10% 50 V	234046
F401	Fuse, Slo-Blo	1/10 Amp 220 V OR	545519
F401	Fuse, Slo-Blo	0.20 Amp 117 V	545508
G401	Chopper	Special	540127
J401	Receptacle	Amphenol 80-PC-2FT	479119
M401	Meter & Scale	International Inst.	554294
R401	Resistor, Var.	5 k 20% 2 W	311270
S401	Switch, Pushbutton	Centralab Series PB-10 (Modified)	465154
S402	Switch, Slide	Switchcraft No. 46256LFR	465134
S403	Switch, Rotary	Ledex Series 312	466212
T401	Transformer, Power	Boonton Electronics	446066
	DIGITAL CONTROL BOARD		
A604	Op. Amp.	LM301AN	535012
A605	Op. Amp.	LM301AN	535012
C606	Capacitor, Cer.	10 nF 100 V	224119
C607	Capacitor, Cer.	10 nF 100 V	224119
CR602	Diode, Zener	1N5236B (7.5 V)	530087
CR604	Diode, Zener	1N5227B (3.6 V)	530095
CR605	Diode, Zener	1N5227B (3.6 V)	530095
IC601	Integrated Circuit	SN74L10N (Input NAND Gate)	534029
IC602	Integrated Circuit	SN74L00N (Input NAND Gate)	534002
IC603	Integrated Circuit	CD4002AE (Input NAND Gate)	534044
IC604	Integrated Circuit	CD4002AE (Input NAND Gate)	534044
IC605	Integrated Circuit	SN74L00N (Input NAND Gate)	534002

Reference	Description		BEC Part No.
	DIGITAL CONTROL BOARD (CONTINUED)		
IC606	Integrated Circuit	CD4016AE (Quad Switch)	534007
IC607	Integrated Circuit	SN74L00N (Input NAND Gate)	534002
Q602	Transistor, FET	2N5653	528056
Q603	Transistor, FET	2N5653	528056
Q605	Transistor, FET	2N5653	528056
Q607	Transistor, PNP	2N3905	528025
Q608	Transistor, PNP	2N3905	528025
Q609	Transistor, FET	2N5653	528056
Q610	Transistor, PNP	2N3905	528025
R603	Resistor, Comp.	4.7 kΩ 5%	344365
R604	Resistor, Comp.	4.7 kΩ 5%	344365
R606	Resistor, Comp.	4.7 kΩ 5%	344365
R608	Resistor, Comp.	4.7 kΩ 5%	344365
R609 through R612	Resistor, Comp.	100 kΩ 5%	344500
R613	Resistor, Comp.	15 kΩ 5%	344417
R618	Resistor, Comp.	100 kΩ 5%	344500
R623	Resistor, Comp.	100 kΩ 5%	344500
R624	Resistor, Comp.	10 kΩ 5%	344400
R625	Resistor, Comp.	4.7 kΩ 5%	344365
R632	Resistor, Var.	200 Ω 10% 1 W	311269
R633	Resistor, MF	2.05 kΩ 1%	341330
R635	Resistor, MF	953 Ω 1%	341294
R636	Resistor, MF	16.5 kΩ 1%	341421
R637	Resistor, MF	13.0 kΩ 1%	341411
R638	Resistor, MF	11.5 kΩ 1%	341406
R639	Resistor, MF	33.2 kΩ 1%	341450
R640	Resistor, MF	80.6 kΩ 1%	341487
R641	Resistor, Comp.	10 kΩ 5%	344400
R642	Resistor, Comp.	10 kΩ 5%	344400
R643	Resistor, MF	9.76 kΩ 1%	341395
R644	Resistor, Var.	2 kΩ 10% 1 W	311264
R645	Resistor, Var.	100 Ω 10% 1 W	311383
	COUNTER PC BOARD		
C1201	Capacitor, Elec.	200 μF +75%/-10% 6 V	283147
C1202*	Capacitor, Mica	120 pF 5% 500 V	200002
C1202*	Capacitor, Mica	56 pF 5% 500 V	200030
C1202*	Capacitor, Mica	150 pF 5% 500 V	200032
C1202*	Capacitor, Mica	91 pF 5% 500 V	200035
C1202*	Capacitor, Mica	33 pF 5% 500 V	200049

*One of the above to be selected during calibration.

C1203	Capacitor, Var.	4.5 - 50 pF 250 V	281009
C1204	Capacitor, Mica	33 pF 5% 500 V	200049
C1205	Capacitor, Mylar	10 nF 20% 250 V	234085
C1206	Capacitor, Mylar	100 nF 20% 250 V	234080
C1207	Capacitor, Cer.	33 pF 10% 100 V	224218
C1208	Capacitor, Elec.	47 μF 10% 20 V	283219
C1209	Capacitor, Elec.	10 μF 20% 20 V	283205
CR1201	Diode, Zener	1N5234B (6.2 V)	530093
CR1202	Diode, Zener	1N5234B (6.2 V)	530093

Reference	Description		BEC Part No.
	COUNTER PC BOARD (CONTINUED)		
CR1203	Diode, Sig.	1N914	530058
CR1204	Diode, Sig.	1N914	530058
IC1201	Integrated Circuit	SN74L00N (NAND Gate)	534002
IC1202	Integrated Circuit	MK5002P (Decade Counter)	534024
J1201	Connector	Amphenol 225-22221-101 (Dual 22 Pin)	479259
J1202	Connector	Amphenol 583485-8 (6 Pin)	479277
J1203	Connector	Amphenol 583485-8 (6 Pin)	479277
J1204	Connector	Amphenol 583485-8 (6 Pin)	479277
Q1201 through Q1208	Transistor, PNP	MPS6516	528037
Q1209	Transistor, NPN	MPS6507	528070
Q1210	Transistor, NPN	MPS6512	528059
Q1211	Transistor, NPN	MPS6512	528059
Q1212	Transistor, NPN	MPS6512	528059
Q1213	Transistor, PNP	2N5087	528042
Q1214	Transistor, NPN	MPS6512	528059
Q1215 through Q1218	Transistor, PNP	2N5087	528042
Q1219	Transistor, NPN	MPS6512	528059
Q1220	Transistor, Uni.	MPU131	528062
Q1221 through Q1224	Transistor, PNP	2N5087	528042
R1201 through R1206	Resistor, Comp.	27 kΩ 5%	343441
R1207	Resistor, Comp.	2 kΩ 5%	343329
R1208	Resistor, Comp.	1 kΩ 5%	343300
R1209	Resistor, Comp.	5.1 kΩ 5%	343368
R1210	Resistor, Comp.	5.1 kΩ 5%	343368
R1211	Resistor, Comp.	75 kΩ 5%	343484
R1212	Resistor, Comp.	100 kΩ 5%	343500
R1213	Resistor, Comp.	100 kΩ 5%	343500
R1214	Resistor, Comp.	100 kΩ 5%	343500
R1215	Resistor, Comp.	27 kΩ 5%	343441
R1216 through R1220	Resistor, Comp.	5.1 kΩ 5%	343368
R1221	Resistor, Comp.	27 kΩ 5%	343441
R1222	Resistor, Comp.	3 kΩ 5%	343346
R1223	Resistor, Comp.	680 Ω 5%	343280
R1224	Resistor, Comp.	430 Ω 5%	343261
R1225	Resistor, Comp.	680 kΩ 5%	343580
R1226	Resistor, Comp.	100 kΩ 5%	343500
R1227	Resistor, Comp.	680 kΩ 5%	343580
R1228	Resistor, Comp.	5.1 kΩ 5%	343368
R1229	Resistor, Comp.	330 Ω 5%	343250
R1230	Resistor, Comp.	4.7 MΩ 5%	343665
R1231 through R1234	Resistor, Comp.	5.1 kΩ 5%	343368
R1235	Resistor, Comp.	430 Ω 5%	343261

Reference	Description		BEC Part No.
		DISPLAY PC BOARD	
CR1301 through CR1304	Diode, Sig.	1N914	530058
DS1301	Numeric Display	MAN3620	536805
DS1302	Numeric Display	MAN3620	536805
DS1303	Numeric Display	MAN3620	536805
DS1304	Lamp	583DX (5 V)	545126
DS1305	Lamp	2200D (5 V)	545120
DS1306	Lamp	2200D (5 V)	545120
DS1307	Lamp	2200D (5 V)	545120
DS1308	Numeric Display	MAN 3620	536805
DS1309	Lamp	2200D (5 V)	545120
DS1310	Lamp	2200D (5 V)	545120
DS1311	Lamp	2200D (5 V)	545120
Q1301 through Q1307	Transistor, NPN	MPS6512	528059
Q1308 through Q1311	Transistor, FET	MPSA12	528052
Q1312	Transistor, PNP	2N5087	528042
R1301 through R1307	Resistor, Comp.	47 Ω 5%	343165
R1308 through R1311	Resistor, Comp.	27 kΩ 5%	343441
R1312	Resistor, Comp.	33 Ω 5%	343150
		A/D CONVERTER PC BOARD	
A1401	Op. Amp. Follower	LM310 Only	535005
A1402	Op. Amp.	LM301AN	535012
A1403	Op. Amp. Follower	LM310 Only	535005
A1404	Op. Amp. Comparator	LM311	535006
C1401	Capacitor, Elec.	1 μF 10% 35 V	283216
C1402	Capacitor, Elec.	1 μF 10% 35 V	283216
C1403	Capacitor, PC	0.1 μF 10% 50 V	234115
C1404	Capacitor, Cer.	33 pF 5% 500 V	224139
C1405	Capacitor, Elec.	1 μF 10% 35 V	283216
C1406	Capacitor, PC	0.1 μF 10% 50 V	234115
C1407	Capacitor, Mica	100 pF 5% 300 V	205006
CR1401	Diode, Zener	1N821 (6.2 V)	530050
CR1402	Diode, Zener	1N821 (6.2 V)	530050
CR1403	Diode, Sig.	1N914	530058
CR1404	Diode, Sig.	1N914	530058
CR1405	Diode, Sig.	1N914	530058
IC1401	Integrated Circuit	CD4016AE (Quad Switch)	534007
IC1402	Integrated Circuit	CD4013AE (Dual "D" Binary)	534021
IC1403	Integrated Circuit	CD4011AE (NAND Gate)	534022
IC1404	Integrated Circuit	CD4001AE (NOR Gate)	534023
Q1401	Transistor, FET	Selected	528068

Reference	Description		BEC Part No.
	A/D CONVERTER PC BOARD (CONTINUED)		
R1401	Resistor, MF	30.9 kΩ 1%	341447
R1402	Resistor, MF	30.9 kΩ 1%	341447
R1403	Resistor, MF	5.49 kΩ 1%	341371
R1404	Resistor, MF	5.49 kΩ 1%	341371
R1405	Resistor, Var.	5 kΩ 20% 0.5 W	311293
R1406	Resistor, MF	1.15 kΩ 1%	341306
R1407	Resistor, MF	200 kΩ 1%	341529
R1408	Resistor, Var.	5 kΩ 20% 0.5 W	311293
R1409	Resistor, Comp.	330 Ω 5%	343250
R1410	Resistor, Comp.	10 kΩ 5%	343400
R1411	Resistor, MF	1.15 kΩ 1%	341306
R1412	Resistor, Comp.	27 kΩ 5%	343441
R1413	Resistor, Comp.	4.7 MΩ 5%	343665
R1414	Resistor, Comp.	680 Ω 5%	343280
R1415	Resistor, Comp.	27 kΩ 5%	343441
R1416	Resistor, Comp.	5.1 kΩ 5%	343368
R1417	Resistor, Comp.	10 kΩ 5%	343400
R1418	Resistor, Comp.	4.7 MΩ 5%	343665
R1419	Resistor, Comp.	1 MΩ 5%	343600
R1420	Resistor, Comp.	47 kΩ 5%	343465
	AUTORANGE PC BOARD (OPTION -01)		
A701	Op. Amp.	LM301AN	535012
A702	Op. Amp.	LM301AN	535012
C701	Capacitor, Mica	33 pF 5% 500 V	200049
C702	Capacitor, Cer.	0.01 μF 100 V	224119
C703	Capacitor, Cer.	0.01 μF 100 V	224119
C704	Capacitor, Tant.	1 μF 20% 35 V	283199
C705	Capacitor, Mica	33 pF 5% 500 V	200049
C706 through C709	Capacitor, Mica	100 pF 5% 500 V	200001
C710	Capacitor, Elec.	50 μF +75/-10% 25 V	283159
C711 through C716	Capacitor, Mica	200 pF 5% 500 V	200004
CR701 through CR749	Diode, Sig.	1N914	530058
CR750	Diode, Zener	1N5234B (6.2 V)	530093
Q701	Transistor, Uni.	D5K2	528036
Q702 through Q710	Transistor, PNP	MPS6516	528037
Q711	Transistor, NPN	MPS6512	528059
Q712 through Q725	Transistor, PNP	MPS6516	528037
R701	Resistor, Comp.	47 kΩ 5%	344465
R702	Resistor, Comp.	10 kΩ 5%	344400
R703	Resistor, Comp.	10 kΩ 5%	344400
R704	Resistor, Comp.	62 kΩ 5%	344476
R705	Resistor, Comp.	100 kΩ 5%	344500

Reference	Description		BEC Part No.
	AUTORANGE PC BOARD (OPTION -01) (CONTINUED)		
R706	Resistor, MF	31.6 kΩ 1%	341448
R707	Resistor, Comp.	47 kΩ 5%	344465
R708	Resistor, Comp.	47 kΩ 5%	344465
R709	Resistor, Comp.	10 kΩ 5%	344400
R710	Resistor, Comp.	47 kΩ 5%	344465
R711	Resistor, MF	73.2 kΩ 1%	341483
R712	Resistor, Comp.	47 kΩ 5%	344465
R713	Resistor, Comp.	10 kΩ 5%	344400
R714	Resistor, Comp.	47 kΩ 5%	344465
R715	Resistor, MF	40.2 kΩ 1%	341458
R716	Resistor, Var.	20 kΩ 10% 1 W	311266
R717	Resistor, Comp.	10 Ω 5%	344100
R718	Resistor, Comp.	10 kΩ 5%	344400
R719 through R722	Resistor, Comp.	330 kΩ 5%	344550
R723	Resistor, Comp.	15 kΩ 5%	344417
R724	Resistor, Comp.	10 kΩ 5%	344400
R725 through R728	Resistor, Comp.	47 kΩ 5%	344465
R729	Resistor, Comp.	470 Ω 5%	344265
R730	Resistor, Comp.	47 kΩ 5%	344465
R731	Resistor, Comp.	10 kΩ 5%	344400
R732	Resistor, Comp.	47 kΩ 5%	344465
R733	Resistor, Comp.	10 kΩ 5%	344400
R734	Resistor, Comp.	47 kΩ 5%	344465
R735	Resistor, Comp.	10 kΩ 5%	344400
R736	Resistor, Comp.	47 kΩ 5%	344465
R737	Resistor, Comp.	10 kΩ 5%	344400
R738	Resistor, Comp.	47 kΩ 5%	344465
R739	Resistor, Comp.	10 kΩ 5%	344400
R740	Resistor, Comp.	47 kΩ 5%	344465
R741	Resistor, Comp.	10 kΩ 5%	344400
R742	Resistor, Comp.	47 kΩ 5%	344465
R743	Resistor, Comp.	10 kΩ 5%	344400
R744	Resistor, Comp.	47 kΩ 5%	344465
R745 through R751	Resistor, Comp.	10 kΩ 5%	344400
R752 through R757	Resistor, Comp.	47 kΩ 5%	344465

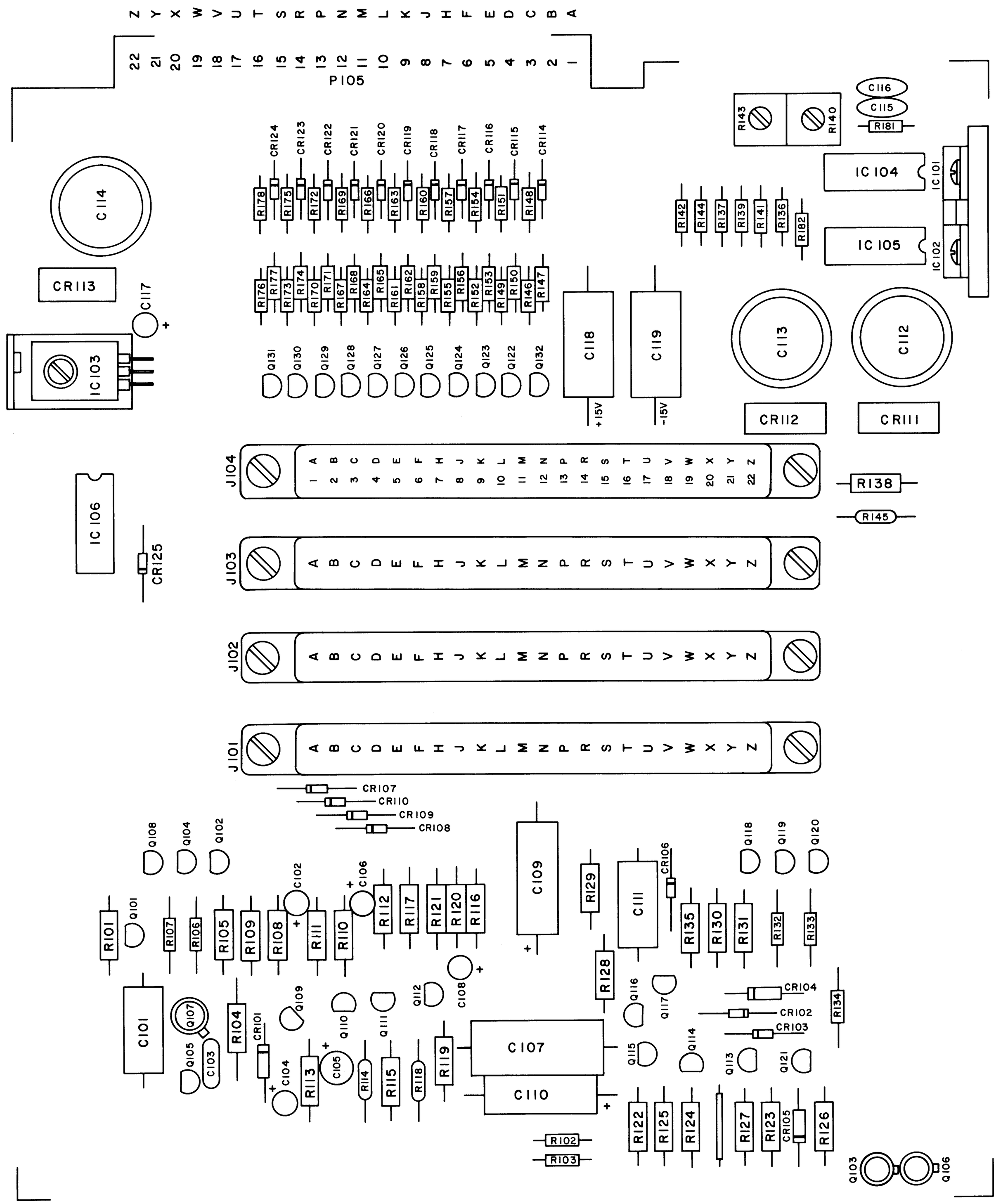

MODEL 92BD
Amplifier
E830581L Sheet 1a of 3

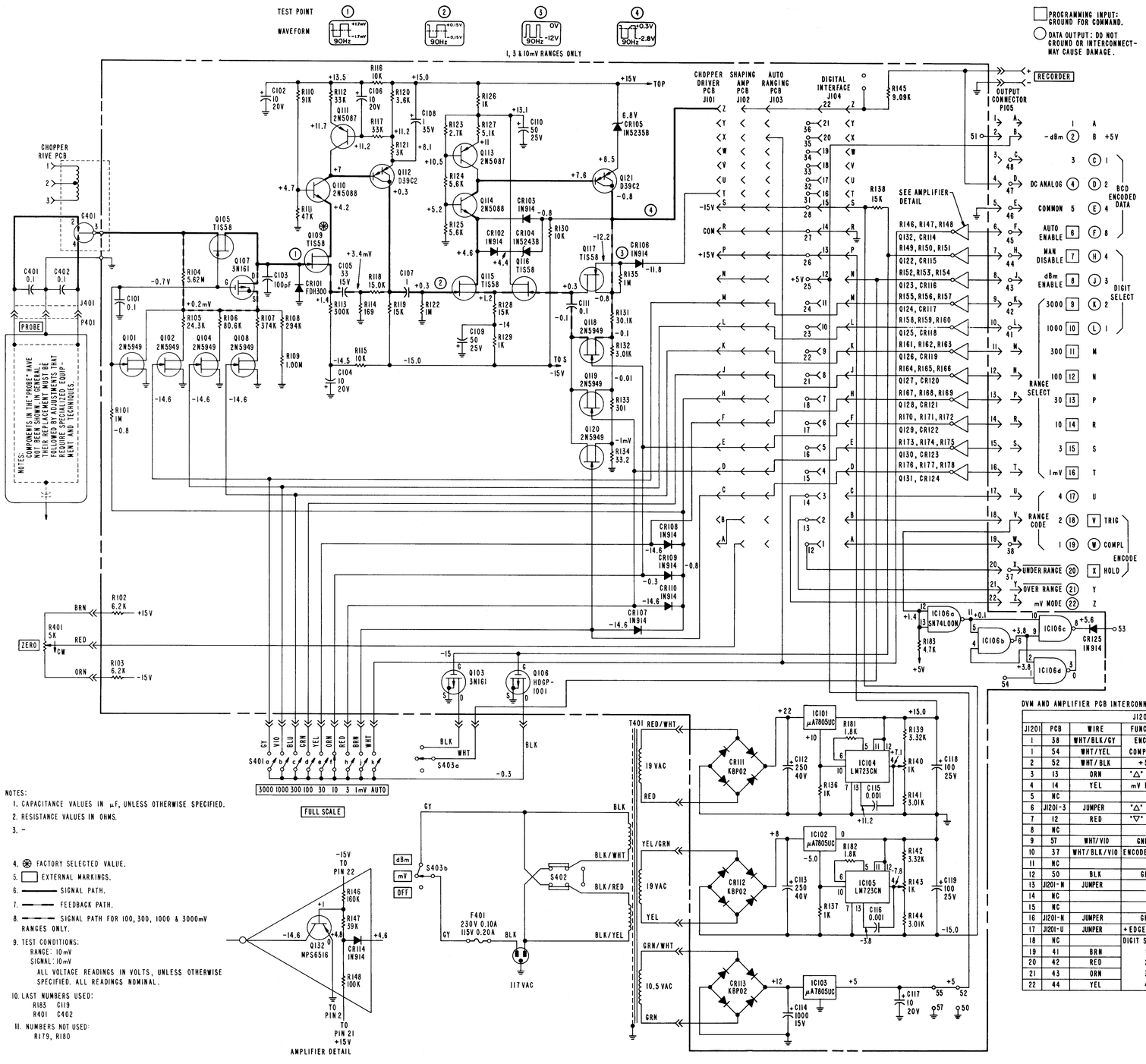

NOTES:

1. CAPACITANCE VALUES IN μF, UNLESS OTHERWISE SPECIFIED.
2. RESISTANCE VALUES IN OHMS.
3. –
4. ⊛ FACTORY SELECTED VALUE.
5. ▭ EXTERNAL MARKINGS.
6. ——— SIGNAL PATH.
7. — — — FEEDBACK PATH.
8. — · — SIGNAL PATH FOR 100, 300, 1000 & 3000mV RANGES ONLY.
9. TEST CONDITIONS:
   RANGE: 10mV
   SIGNAL: 10mV
   ALL VOLTAGE READINGS IN VOLTS, UNLESS OTHERWISE SPECIFIED. ALL READINGS NOMINAL.
10. LAST NUMBERS USED:
    R183 C119
    R401 C402
11. NUMBERS NOT USED:
    R179, R180

DVM AND AMPLIFIER PCB INTERCONNECTION TABLE

J1201 DVM CONNECTOR							
J1201	PCB	WIRE	FUNCTION	J1201	PCB	WIRE	FUNCTION
1	38	WHT/BLK/GY	ENCODE				
1	54	WHT/YEL	COMPLETE	A	51	WHT/BRN	-dBm
2	52	WHT/BLK	+5V	B	55	WHT/GRN	+5V
3	13	ORN	"△" NOT	C	18	GY	"mV" NOT
4	14	YEL	mV MODE	D	NC		
5	NC			E	J1201-7	JUMPER	"▽" NOT
6	J1201-3	JUMPER	"△" NOT	F	17	VIO	DP 1
7	12	RED	"▽" NOT	H	16	BLU	DP 2
8	NC			J	15	GRN	DP 3
9	57	WHT/VIO	GND	K	NC		
10	37	WHT/BLK/VIO	ENCODE HOLD	L	26	WHT/BLU	+15V
11	NC			M	28	WHT/GY	-15V
12	50	BLK	GND	N	J1201-16	JUMPER	SIGNAL LOW
13	J1201-N	JUMPER		P	32	WHT/BLK/RED	SIGNAL HIGH
14	NC			R	NC		
15	NC			S	53	WHT/ORN	ENCODE TRIG
16	J1201-N	JUMPER	GND	T	27	GRN/YEL	GND
17	J1201-U	JUMPER	+EDGEMETER	U	34	WHT/BLK/YEL	+EDGEMETER
18	NC		DIGIT SELECT	V	NC		BCD
19	41	BRN	1	W	45	GRN	8
20	42	RED	2	X	46	BLU	4
21	43	ORN	3	Y	47	VIO	2
22	44	YEL	4	Z	48	GY	1

COMPONENT NUMBERS

100 SERIES

BOONTON ELECTRONICS CORPORATION

MODEL 92BD
Schematic, Amplifier
E830581L Sheet 1b of 3

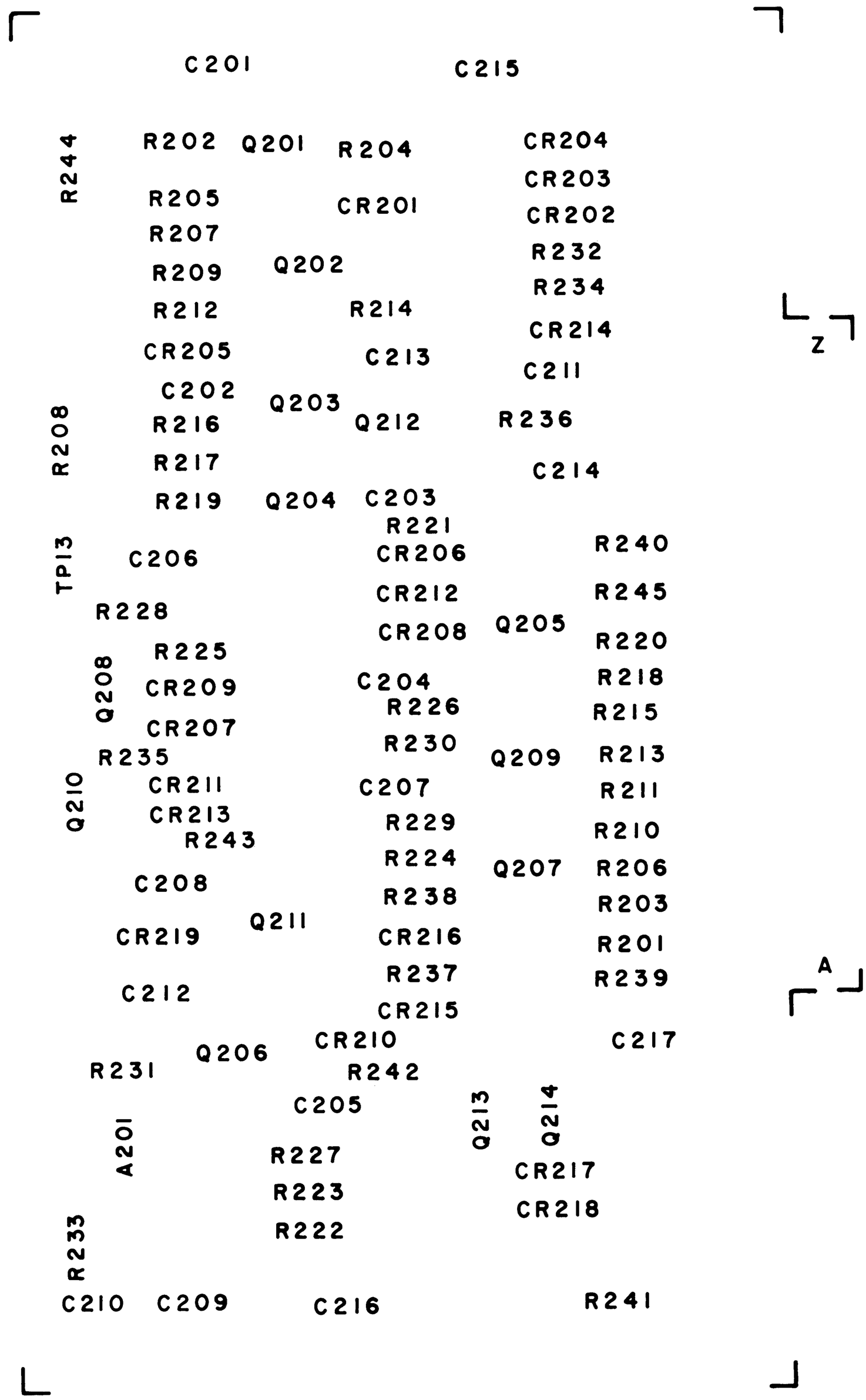

MODEL 42B,BB,BD,C,CB,CD,
92B,BB,BD
Chopper Driver
D830581P Sht. 3a of 3

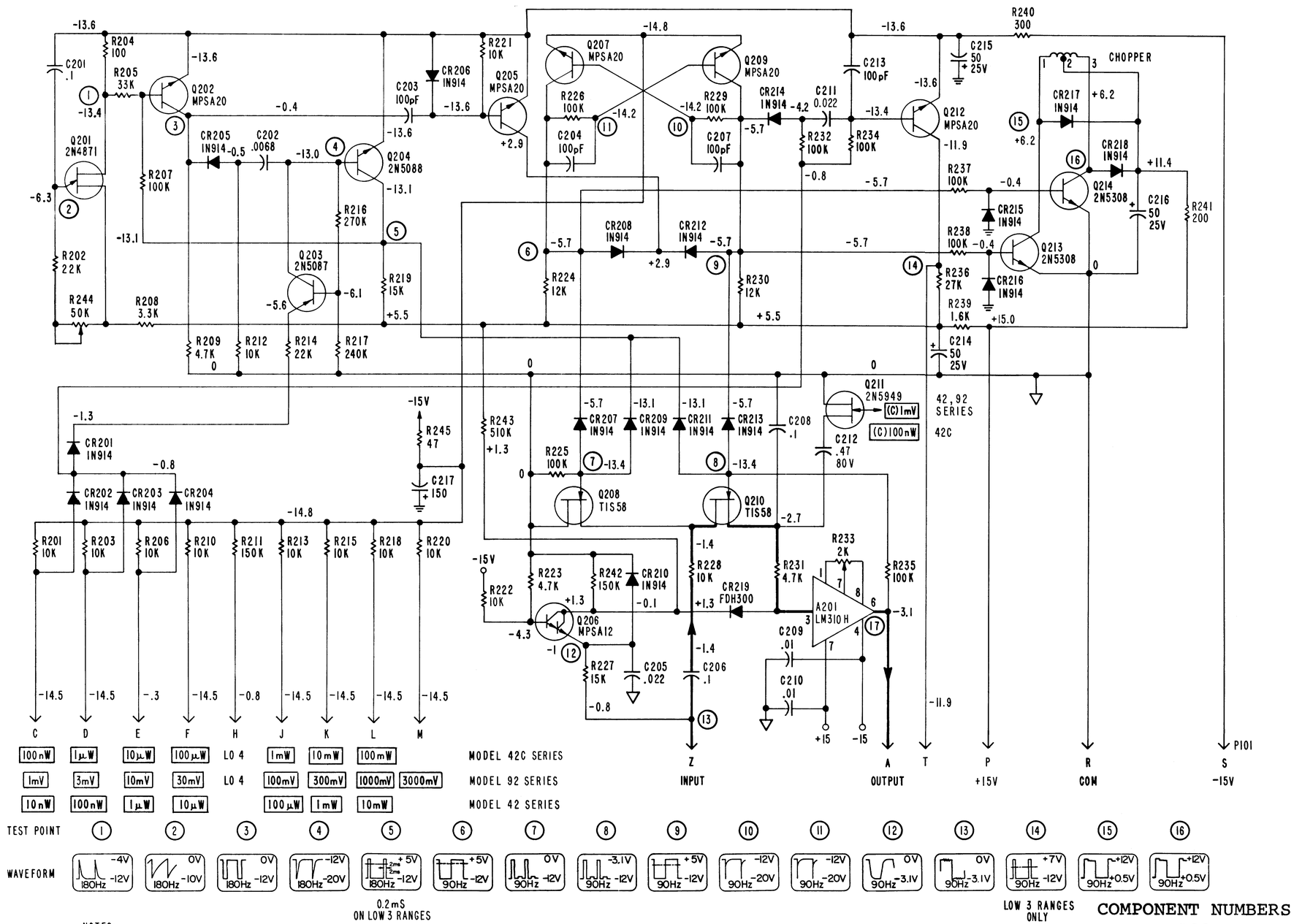

NOTES:

1. CAPACITANCE VALUES IN μF, UNLESS OTHERWISE SPECIFIED.
2. RESISTANCE VALUES IN OHMS.
3. ☐ EXTERNAL MARKINGS.
4. ⏚ COMMON
5. ——— SIGNAL PATH
6. TEST CONDITIONS:
   10mV RANGE, 10mV SIGNAL (42,92 SERIES); 10μW RANGE, 10μW SIGNAL (42C ONLY)

ALL VOLTAGES NOMINAL. ALL READINGS IN VOLTS, UNLESS OTHERWISE SPECIFIED.

8. LAST NUMBERS USED:
   R245 C217 Q214 CR219 A201

COMPONENT NUMBERS
200 SERIES

P101
CONNECTS TO J101
ON AMP. BD. 566565

INSTRUMENT	SCHEMATIC
42B	830636
42BB	830658 SHT. 1
42BD	830592 SHT. 1
42BD-S7	830756 SHT. 1
42BD-S11	831058 SHT. 1
42B-18	830640
42B-19	830641
92B	830605
92BB	830752
92BD	830581 SHT. 1
42C	830636
42CD	830592 SHT. 1
42CB	830658 SHT. 1

BOONTON ELECTRONICS CORPORATION

MODEL 42B,BB,BD,C,CB,CD,
92B,BB,BD
Schematic, Chopper Driver
D830581P Sht. 3b of 3

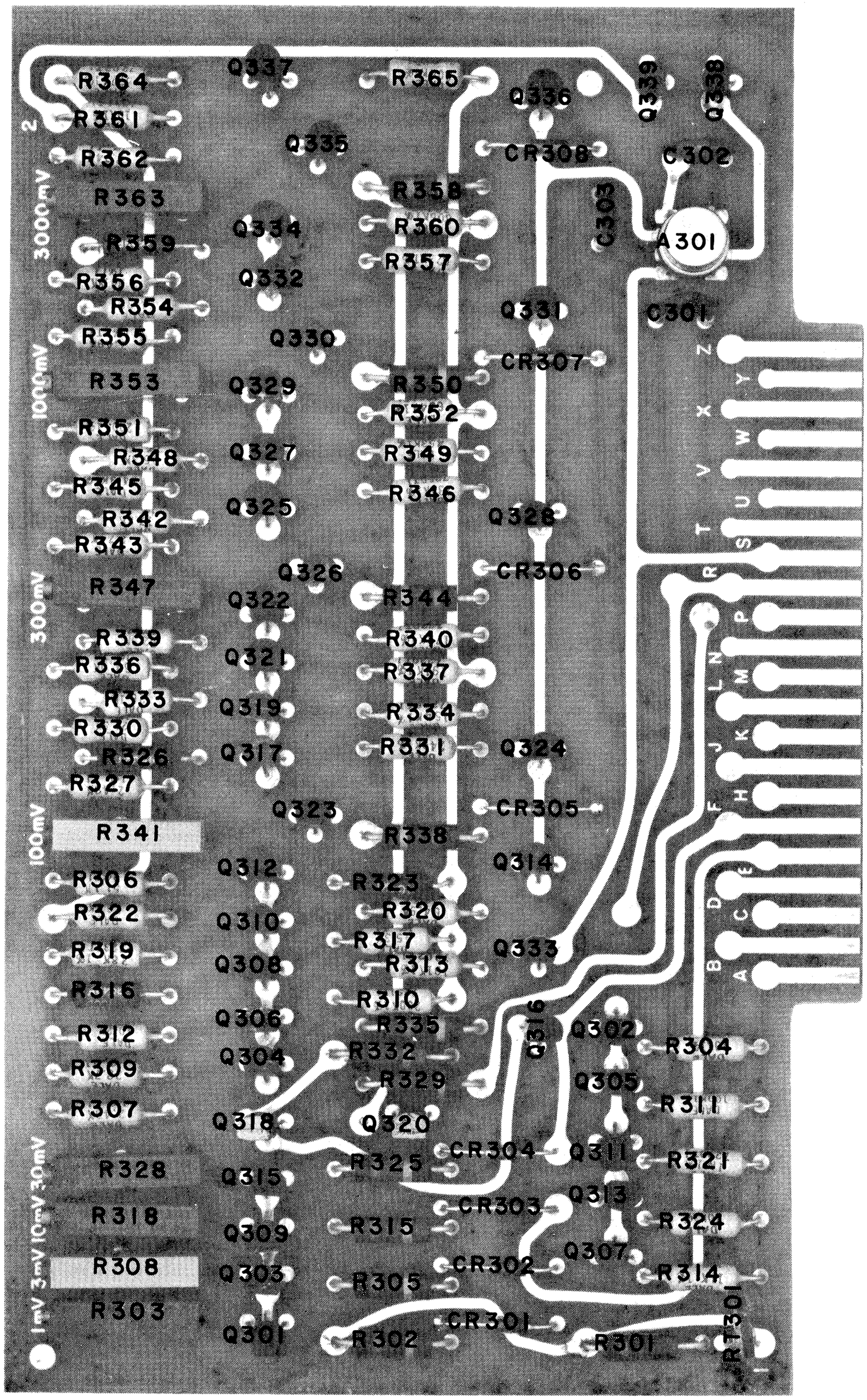

MODEL 92 SERIES
Shaping Amp.
D830456L Sheet 3a/3

NOTES:

1. RESISTANCE VALUES IN OHMS.
2. SIGNAL PATH ———
3. FEEDBACK PATH — — —
4. ▭ EXTERNAL MARKINGS
5. LAST NUMBER USED:
   R365 C303 Q339 CR308

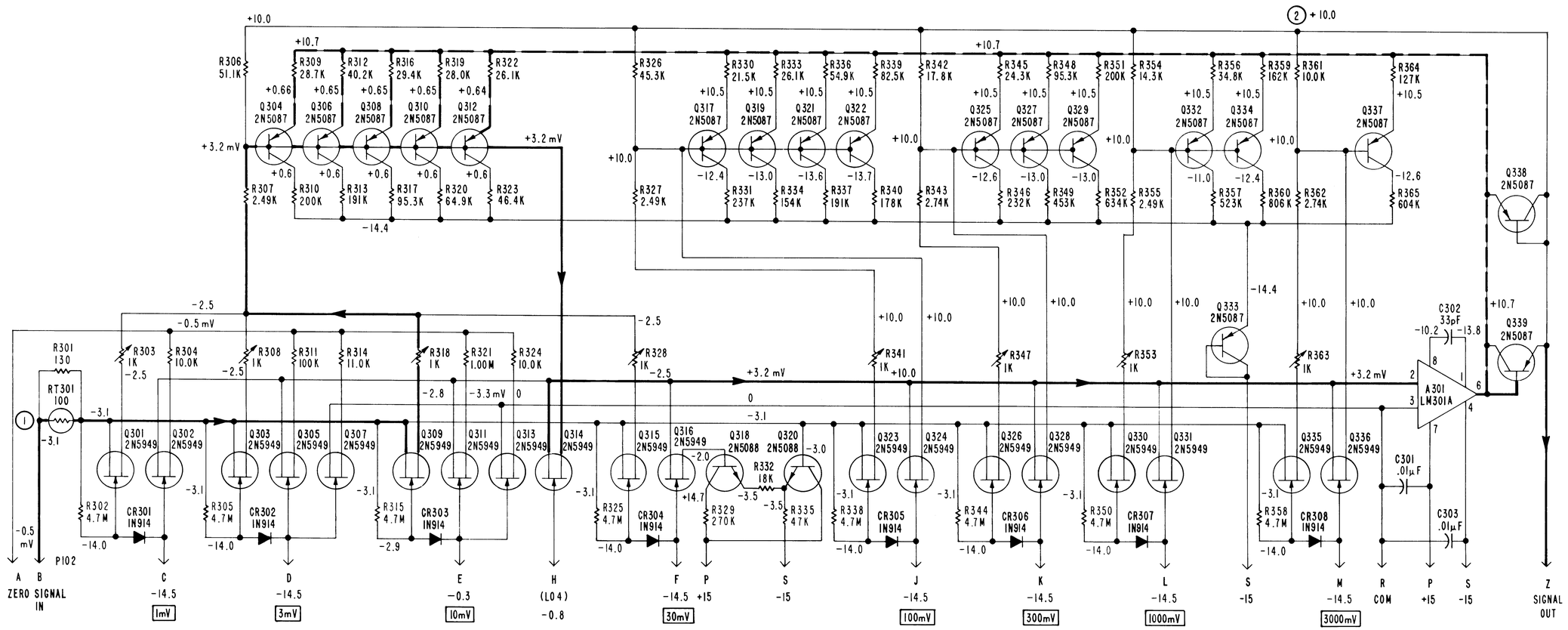

COMPONENT NUMBERS
300 SERIES

BOONTON ELECTRONICS CORPORATION

MODEL 92 SERIES
Schematic, Shaping Amp.
D830456L Sheet 3b/3

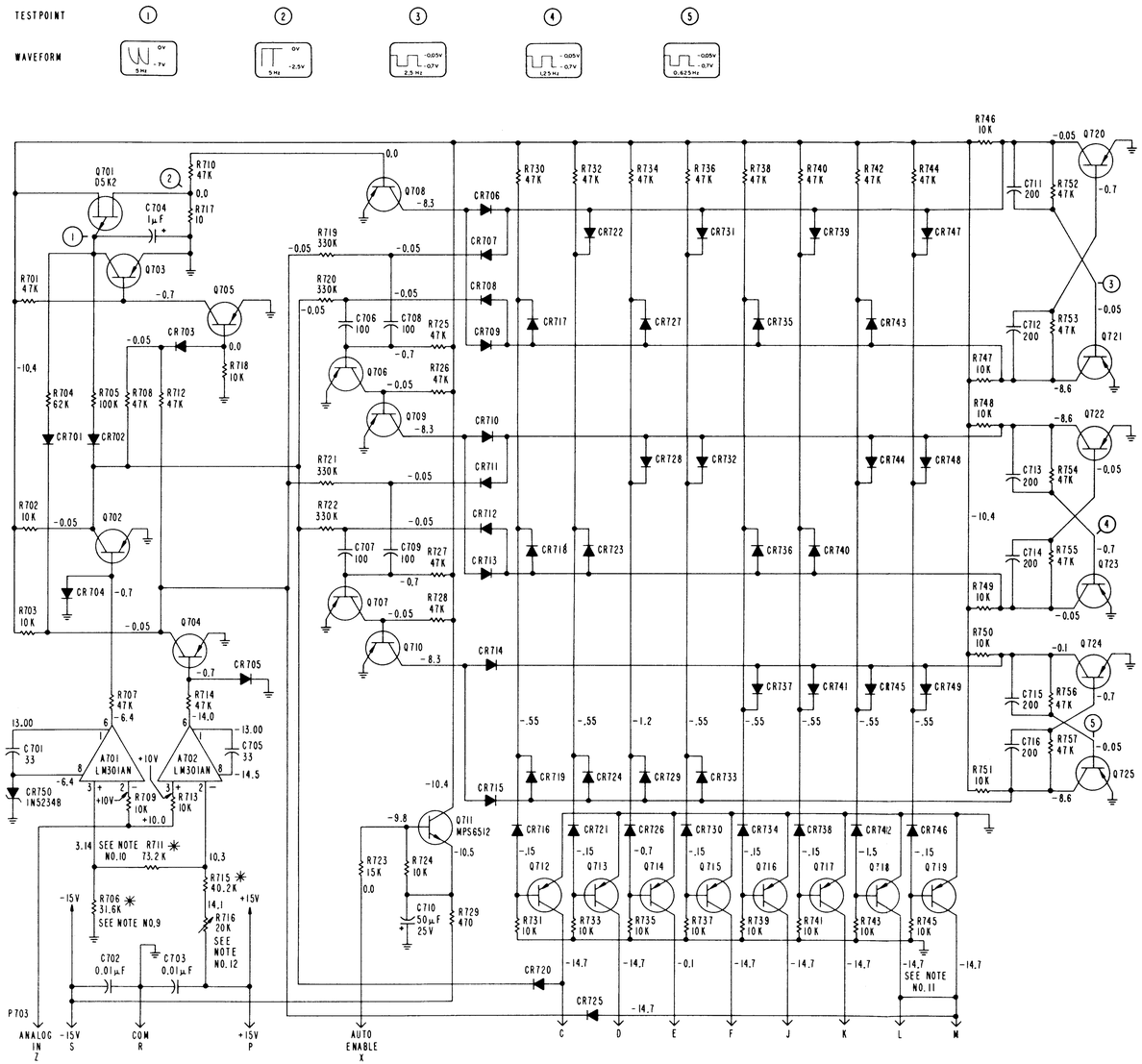

FULL SCALE MARKINGS FOR P703

P703	92BD	42BD	42CD
C	1mV	10nW	100nW
D	3mV	100nW	1μW
E	10mV	1μW	10μW
F	30mV	10μW	100μW
J	100 mV	100μW	1mW
K	300mV	1mW	10mW
L	1000 mV	10mW	100mW
M	3000 mV	—	—

NOTES:

1. CAPACITANCE VALUES IN pF, UNLESS OTHERWISE SPECIFIED.
2. RESISTANCE VALUES IN OHMS AND 1/2 WATT, UNLESS OTHERWISE SPECIFIED.
3. ✳ PRECISION RESISTORS.
4. ALL TRANSISTORS TO BE TYPE MPS6516, UNLESS OTHERWISE SPECIFIED.
5. ALL DIODES TO BE TYPE 1N914, UNLESS OTHERWISE SPECIFIED.
6. WAVESHAPES OCCUR DURING RANGE CHANGE ONLY.
7. ALL VOLTAGE READINGS NOMINAL VOLTS.
8. LAST NUMBERS USED: R757 C716 Q725 CR750
9. ON MODELS 42BD-01 AND 42CD-01 THIS VALUE IS 9.53 K.
10. ON MODELS 42BD-01 AND 42CD-01 THIS VALUE IS 95.3K.
11. THIS CONNECTION FOR 42BD-01 AND 42CD-01.
12. ON MODELS 42BD-01 AND 42CD-01 THIS VALUE IS 50K.
13. TEST CONDITIONS:

	92BD	42BD	42CD
RANGE:	10mV	1μW	10μW
INPUT:	10mV	1μW	10μW

BOONTON ELECTRONICS CORPORATION

MODEL 42 & 92 SERIES
Schematic, Auto Range
E830483E

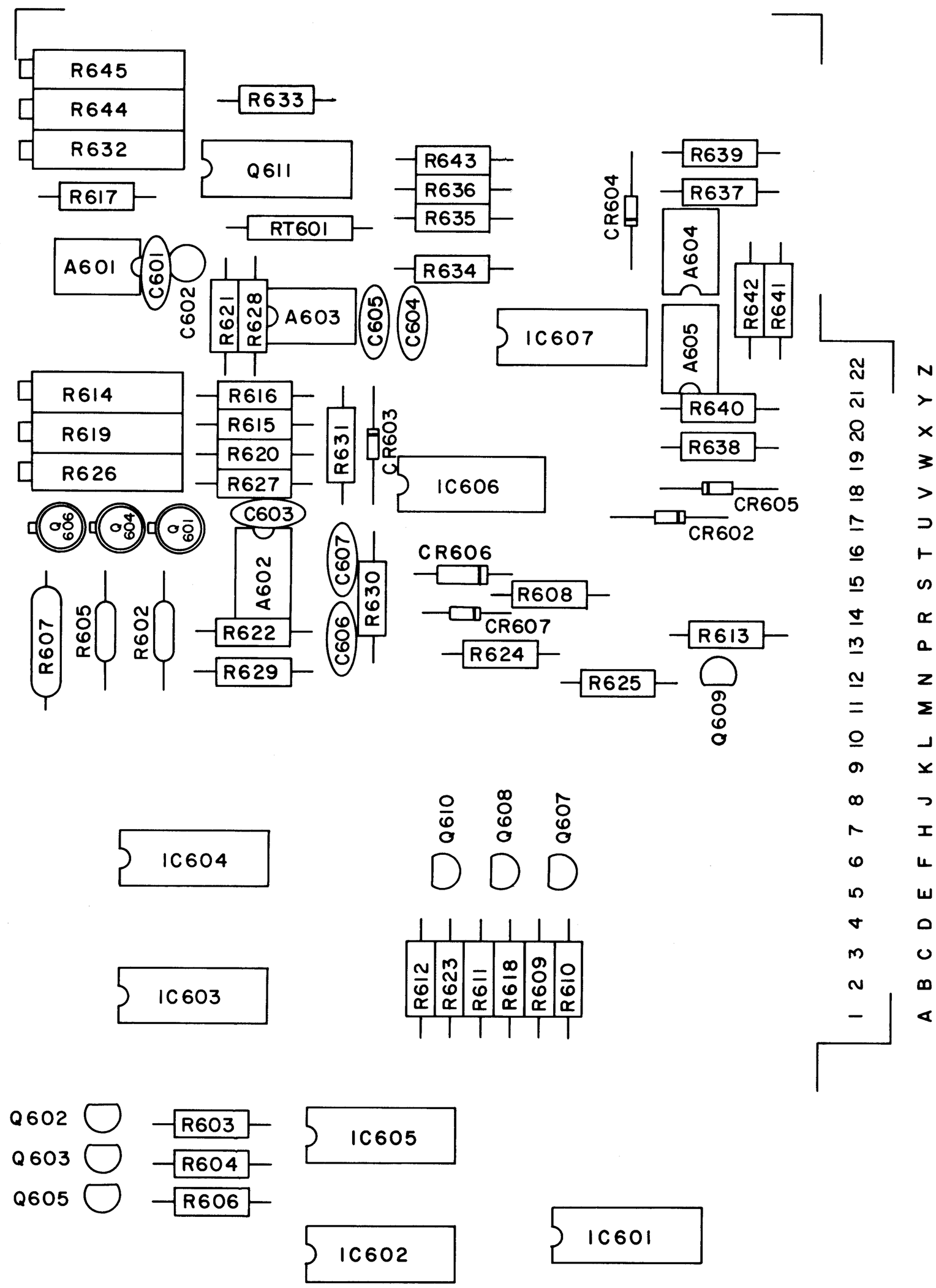

MODEL 92BD
Digital Control
D830581F (Sheet 2a of 3)

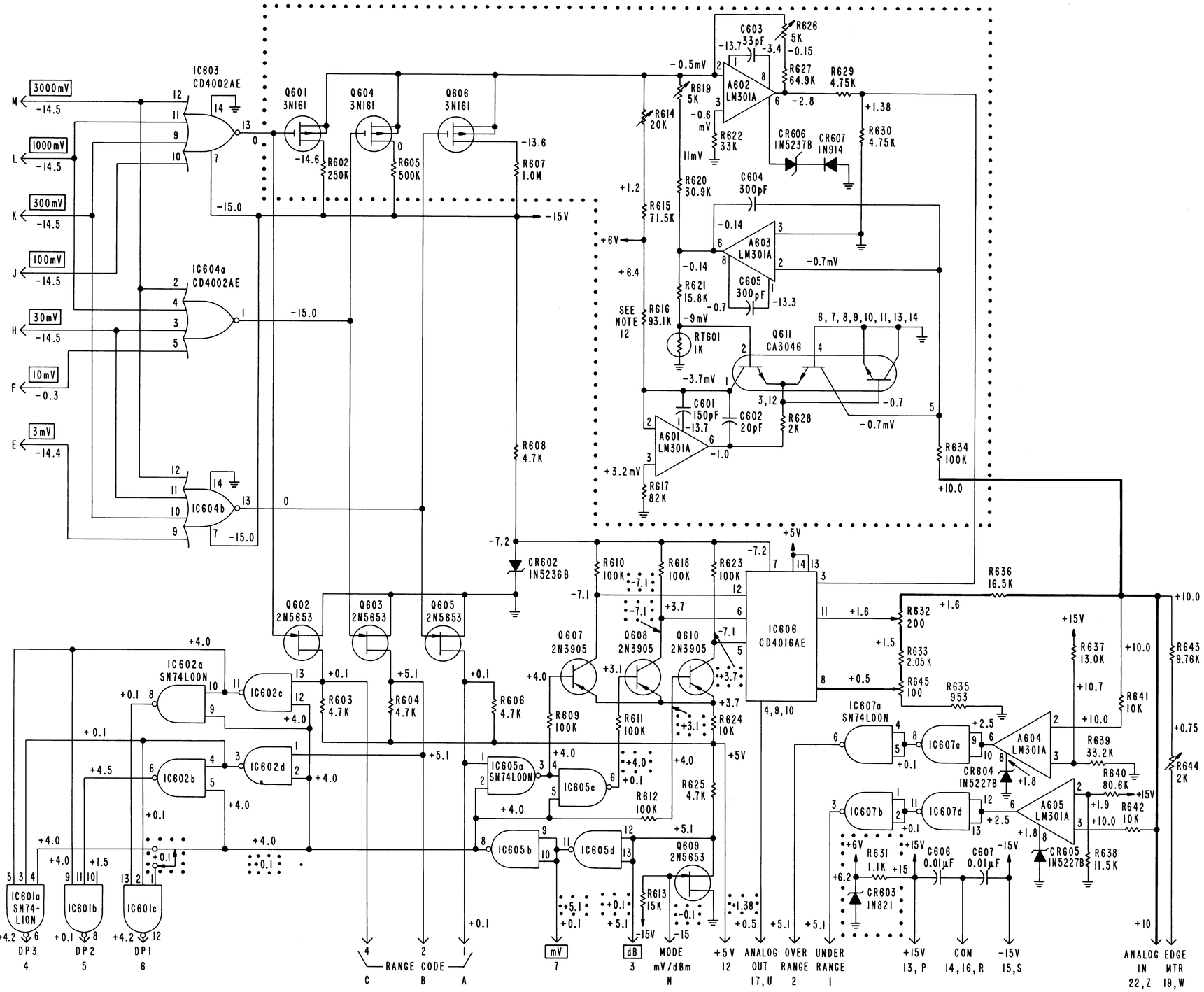

NOTES:

1. RESISTANCE VALUES IN OHMS.
2.
3. EXTERNAL MARKINGS
4. SIGNIFIES COMPONENTS ADDED FOR 92BD-09.
5. DENOTES JUMPER USED ON MODEL 92BD WITH dB OPTION.
6. SIGNAL PATH
7. TEST CONDITIONS: RANGE; 10mV INPUT; 10mV
8. READINGS INSIDE TAKEN WITH dBm MODE ENERGIZED
9. READINGS OUTSIDE TAKEN WITH mV MODE ENERGIZED.
10. VOLTAGE READINGS IN VOLTS, UNLESS OTHERWISE SPECIFIED.
11. LAST NUMBERS USED: R645 C607 Q611 CR607
12. ON 92BD-10 THIS VALUE IS 73.2K.

COMPONENT NUMBERS

600 SERIES

BOONTON ELECTRONICS CORPORATION

MODEL 92BD
Schematic, Digital Control
D830581F (Sheet 2b of 3)

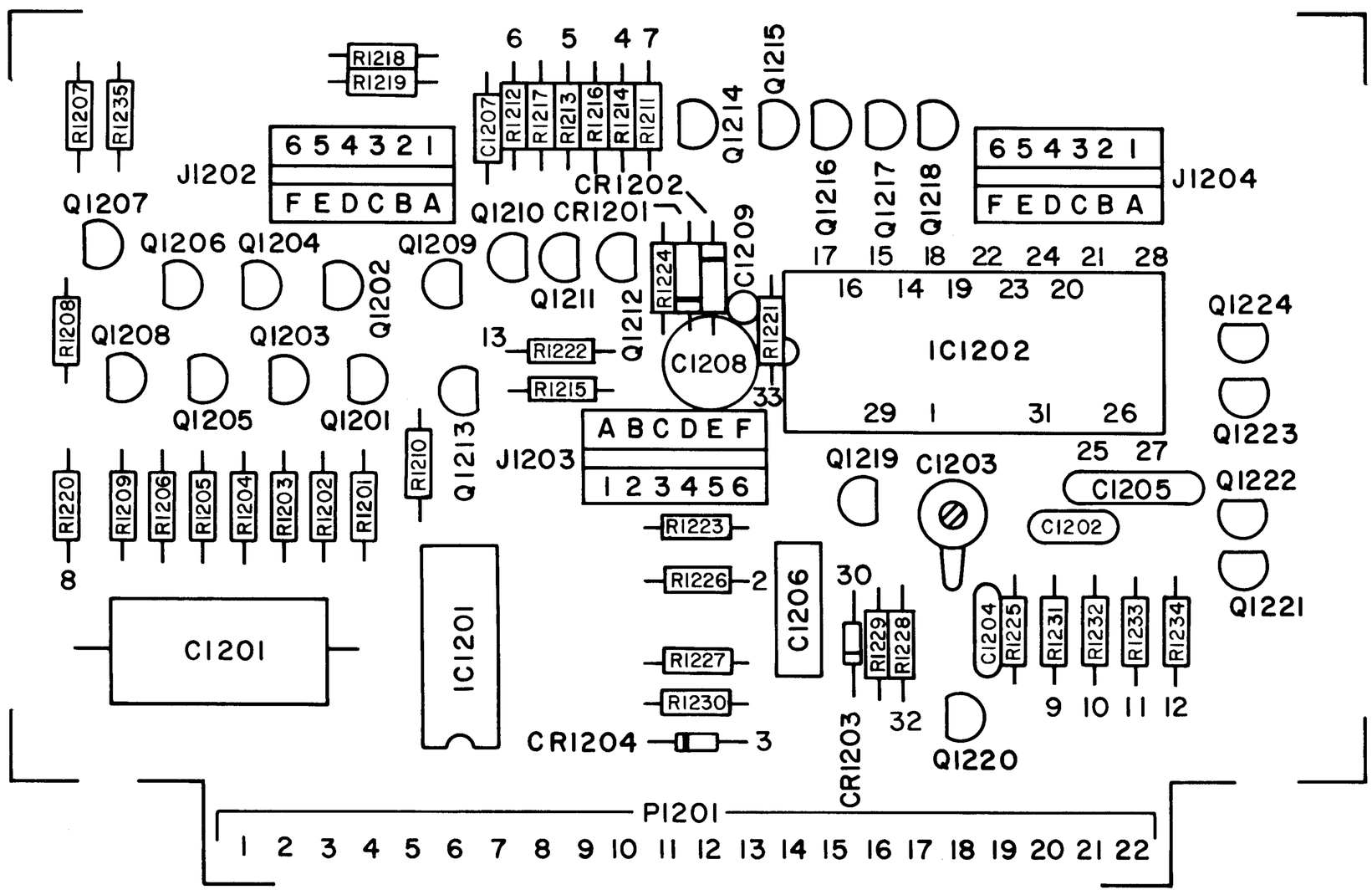

MODEL DPM
Counter Board
E830546G Sht. 1a of 3

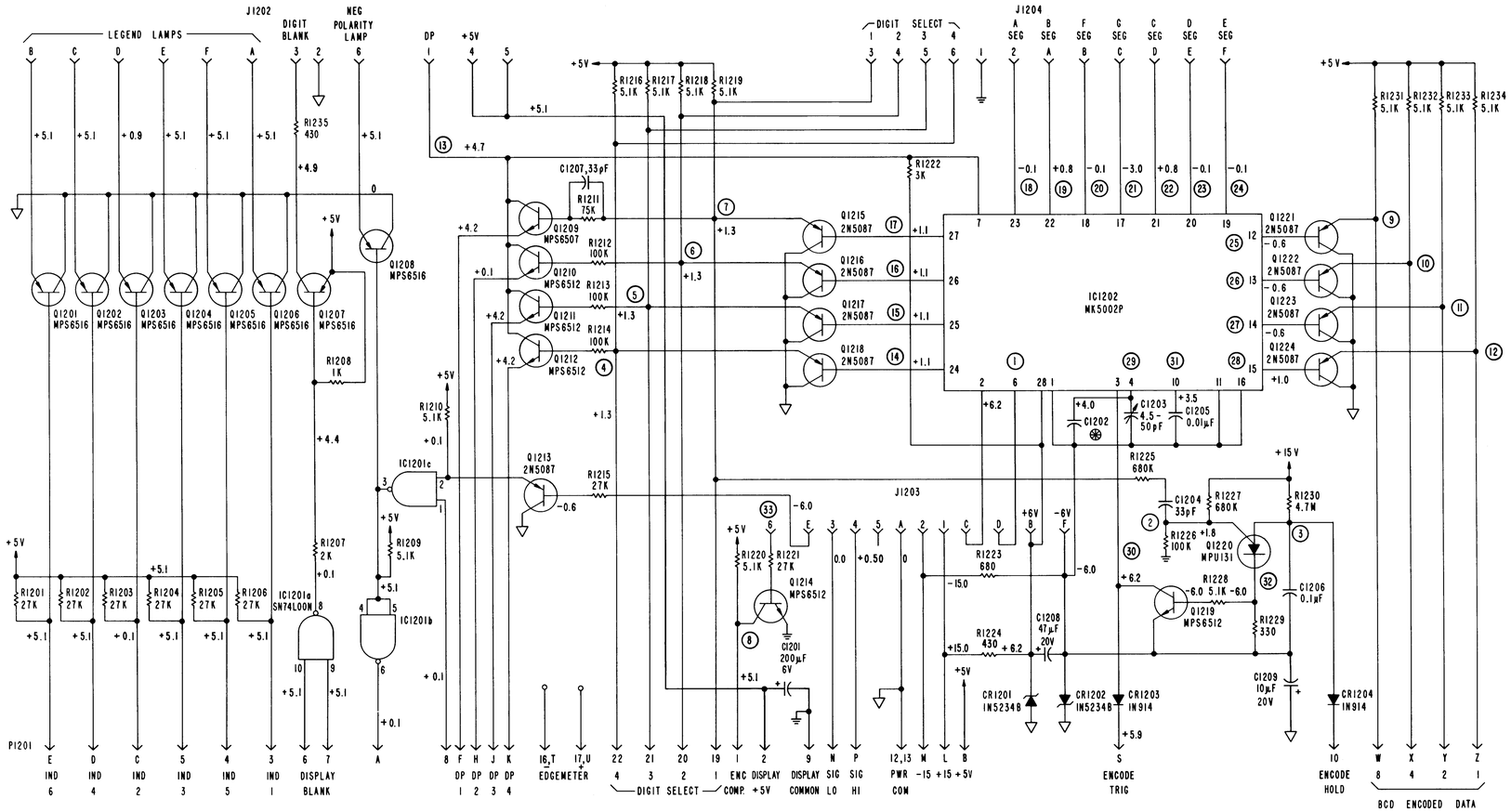

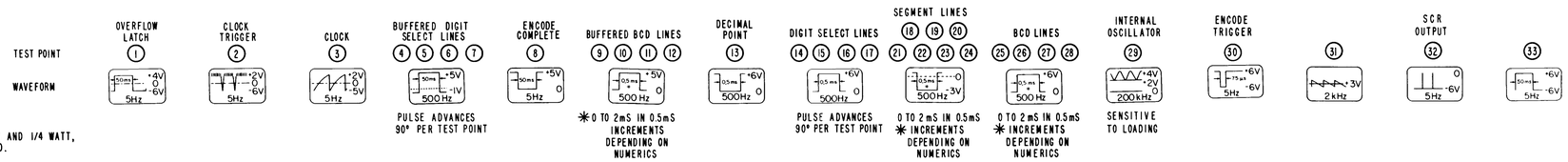

NOTES:

1. RESISTANCE VALUES IN OHMS AND 1/4 WATT, UNLESS OTHERWISE SPECIFIED.
2. ⊛ FACTORY SELECTED.
3. TEST CONDITIONS:
   ALL MEASUREMENTS MADE WITH +0.5V INPUT. ADJ. R1405 TO +1000 COUNTS.
   ALL VALUES NOMINAL.
4. LAST NUMBERS USED:
   R1235 C1209 Q1224
5. ⏚ COMMON

COMPONENT NUMBERS

1200 SERIES

BOONTON ELECTRONICS CORPORATION

MODEL DPM
Schematic, Counter Board
E830546G Sht. 1b of 3

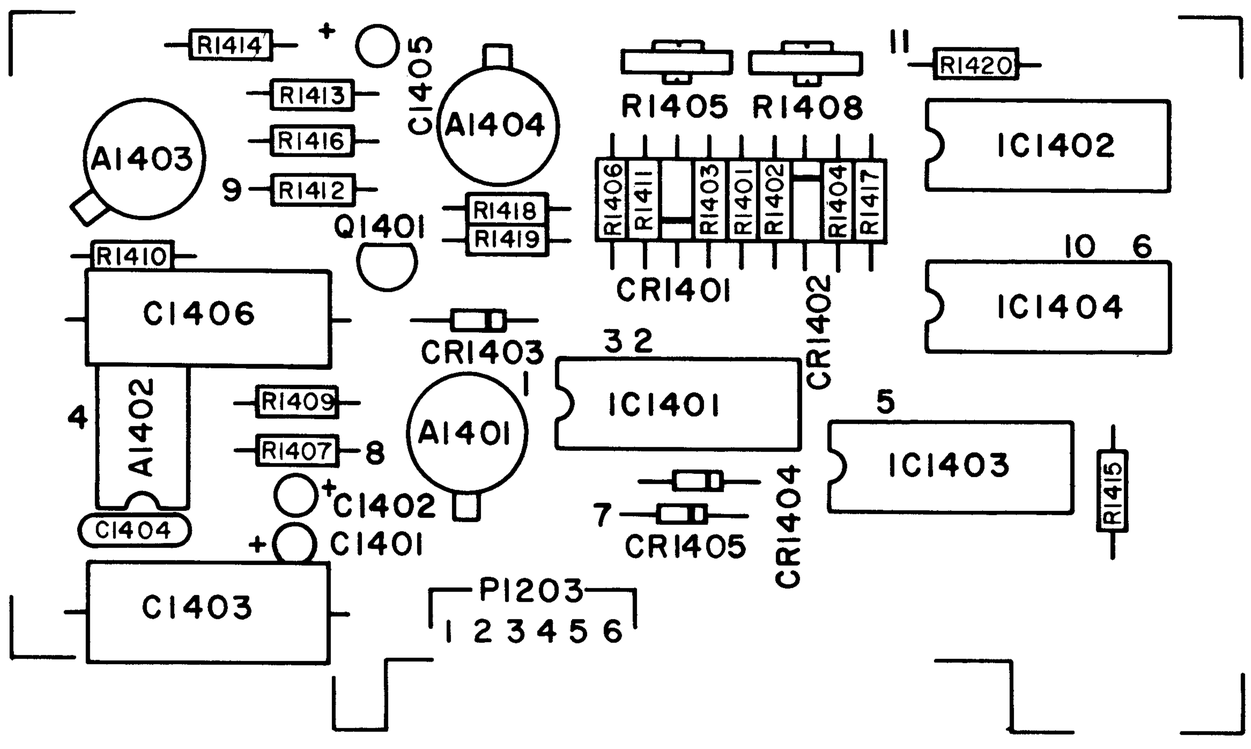

MODEL DPM
A/D Converter
D830546E (Sheet 3a of 3)

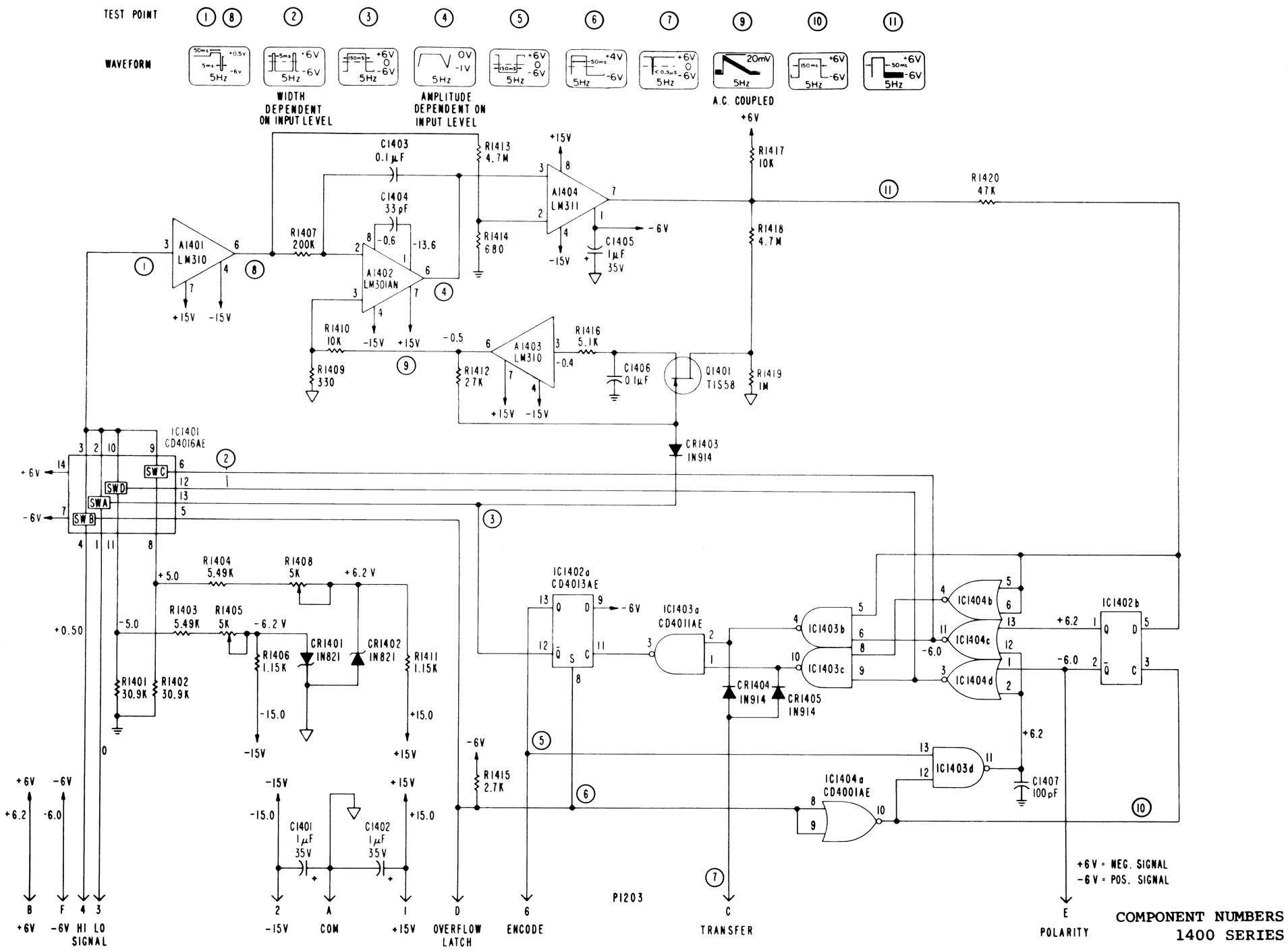

COMPONENT NUMBERS
1400 SERIES

NOTES:

1. RESISTANCE VALUES IN OHMS.
2. -
3. TEST CONDITIONS:
   ALL MEASUREMENTS MADE WITH +0.5 Vdc INPUT (1000 COUNTS).
   ALL VALUES NOMINAL.
4. LAST NUMBERS USED:
   R1420 C1407
5. ⏚ COMMON

BOONTON ELECTRONICS CORPORATION

MODEL DPM
Schematic, A/D Converter
D830546E (Sheet 3b of 3)

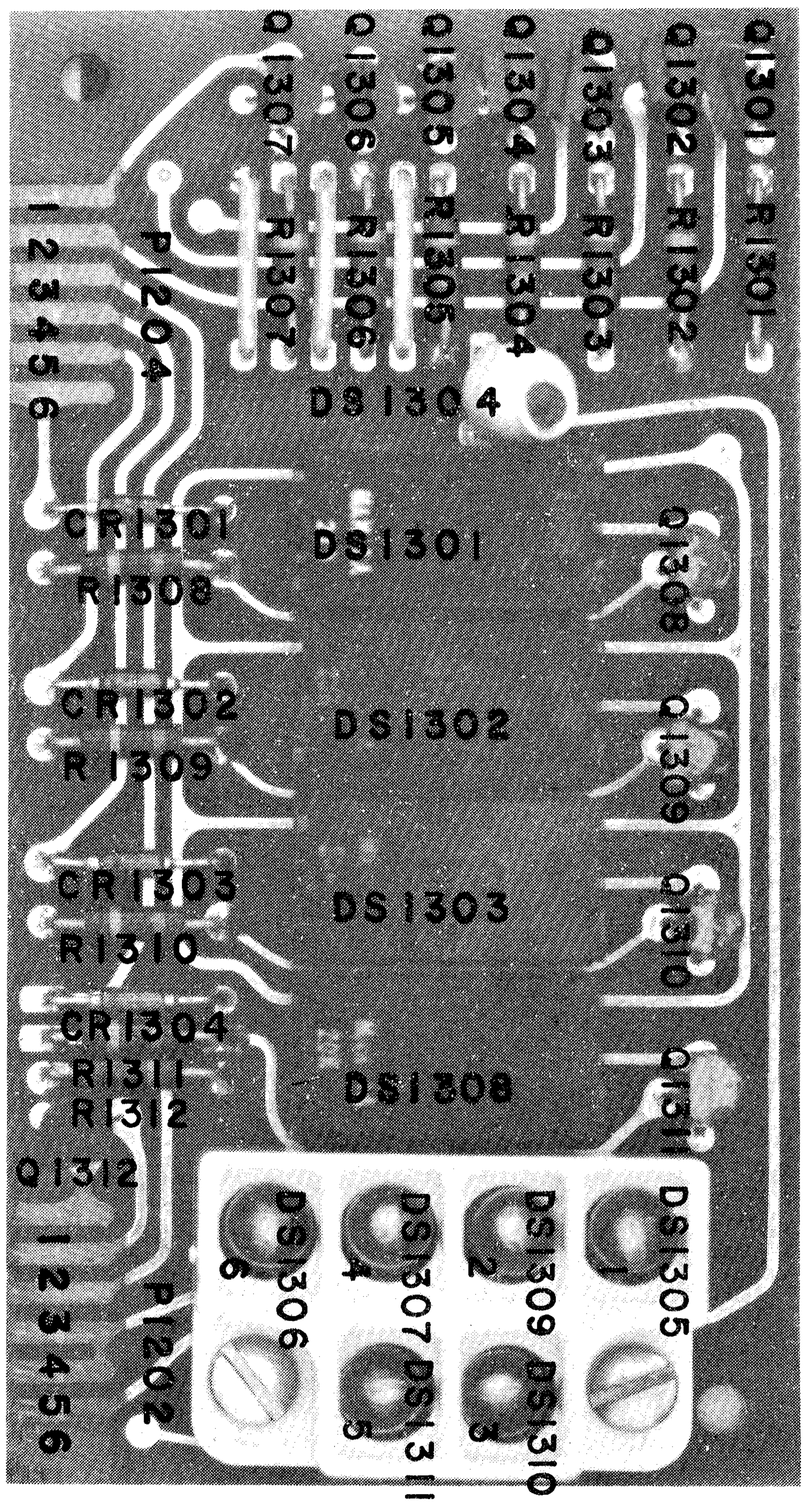

MODEL DPM
DISPLAY BOARD
D830546G (Sheet 2a of 3)

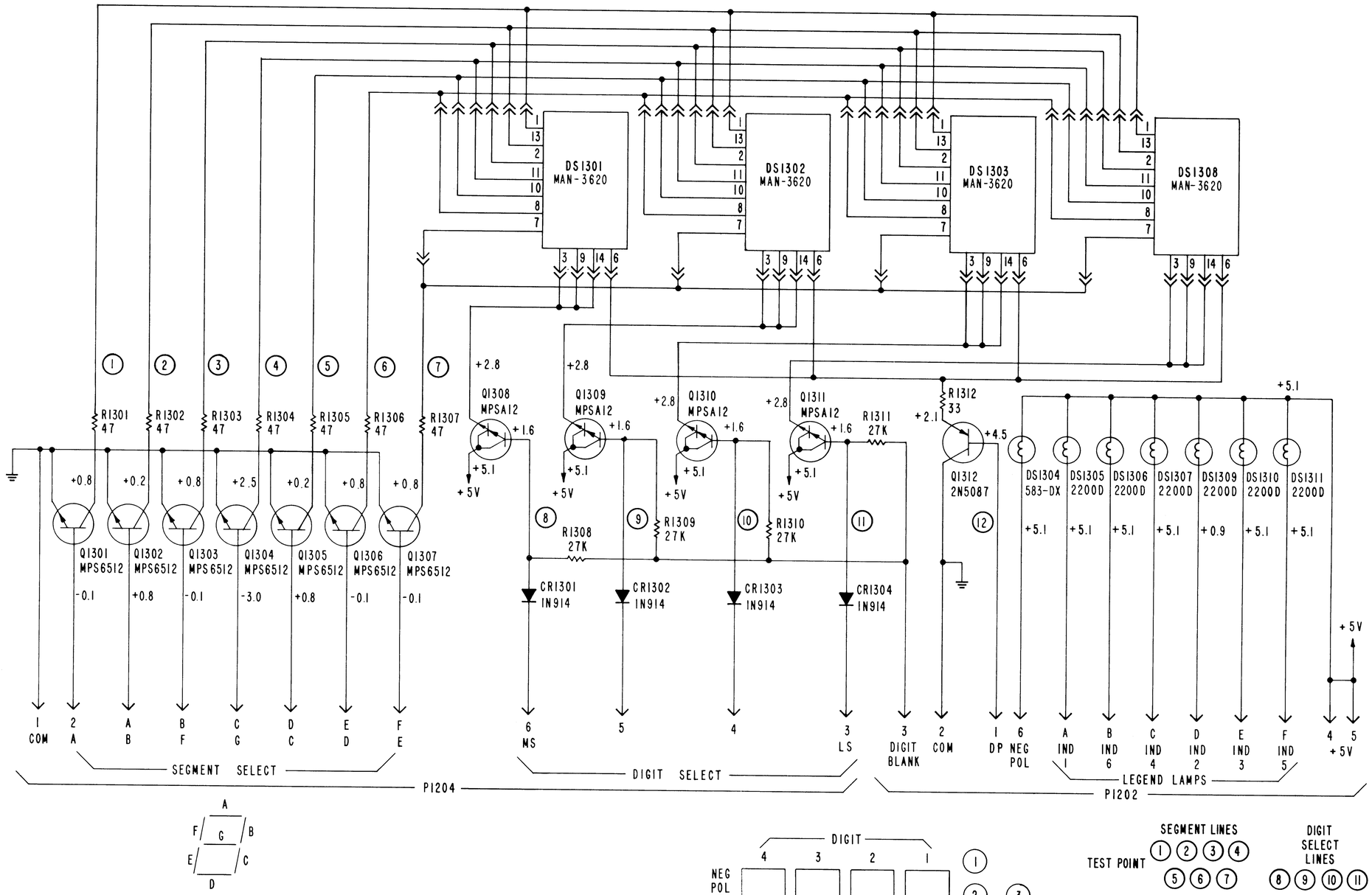

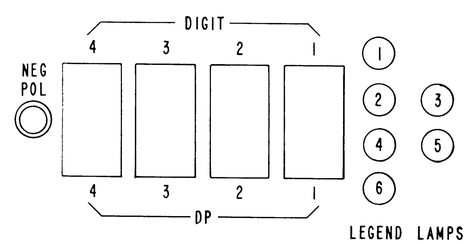

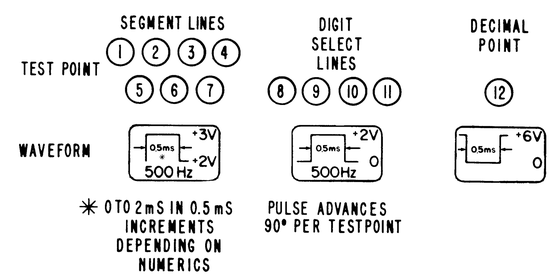

NOTES:

1. RESISTANCE VALUES IN OHMS AND 1/4WATT, UNLESS OTHERWISE SPECIFIED.
2. LAST NUMBERS USED:
   R1312, Q1312, DS1311, CR1304
3. TEST CONDITIONS:
   ALL MEASUREMENTS WITH 0.5Vdc INPUT (1000 COUNTS).
   ALL VALUES NOMINAL

BOONTON ELECTRONICS CORPORATION

MODEL DPM
Schematic, DISPLAY BOARD
D830546G (Sheet 2b of 3)

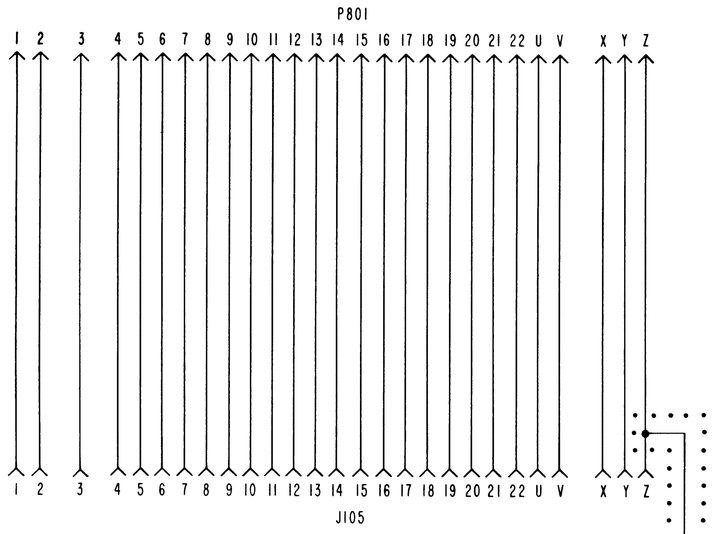

PIN ASSIGNMENTS

P801	42BD	42CD	92BD	72BD		42BD	42CD	92BD	72BD
1				HI TERM BIAS ±	A	1			
2	- dBm			LO TERM BIAS ±	B	2	MSD		
3	LOGIC GROUND				C	4			
4	ANALOG OUTPUT				D	8			
5	COMMON				E	1			
6	AUTO ENABLE				F	2			
7	MANUAL DISABLE				H	4	BCD		
8	dBm ENABLE				J	8	ENCODED		
9			3000 mV		K	1	DATA		
10	10 mW	100 mW	1000 mV	2000 pF	L	2			
11	1 mW	10 mW	300 mV		M	4			
12	100 µW	1 mW	100 mV	200 pF	N	8			
13	10 µW	100 µW	30 mV		P	1			
14	1 µW	10 µW	10 mV	20 pF	R	2	LSD		
15	100 nW	1 nW	3 mV		S	4			
16	10 nW	100 nW	1 mV	2 pF	T	8			
17	4			2	U				
18	2	RANGE CODE		1	V	TRIGGER			
19	1				W	COMPLETE	ENCODE		
20	UNDERRANGE "NOT"				X	HOLD			
21	OVERRANGE "NOT"				Y				
22	PWR MODE		mV MODE	POLARITY	Z				

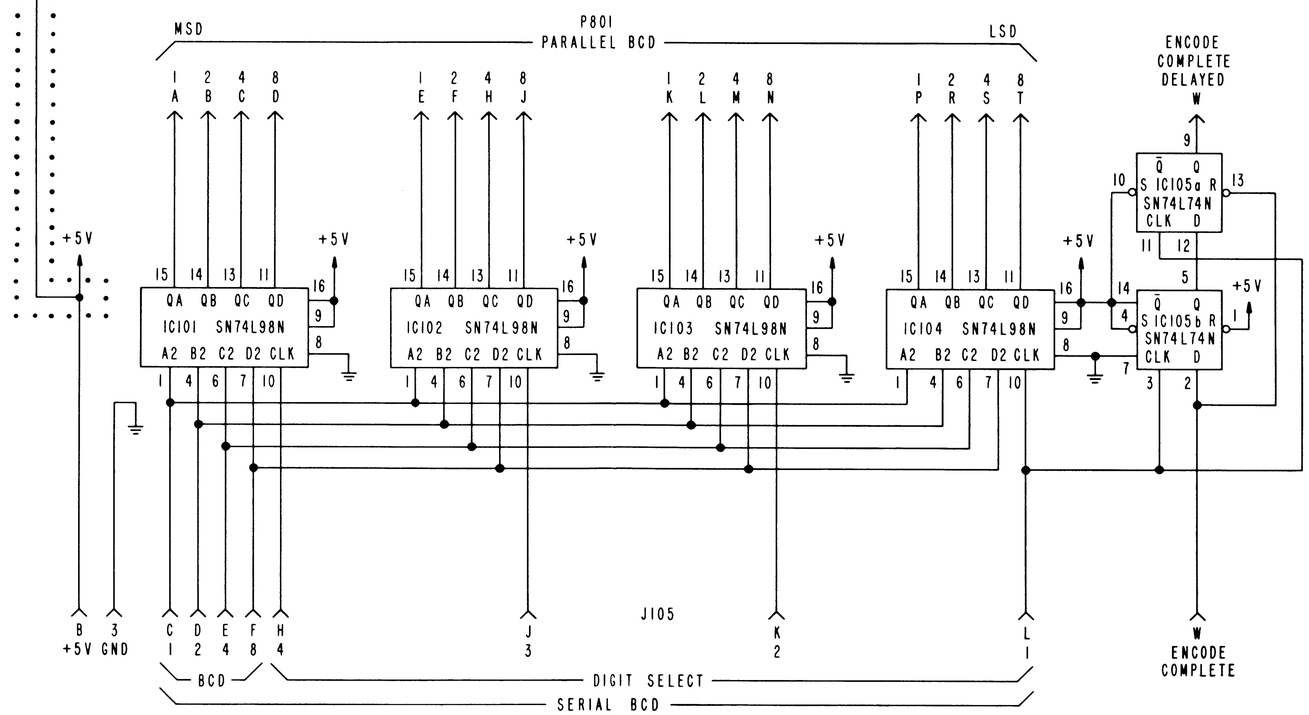

NOTE:
1. LOGIC LEVEL; TTL/DTL COMPATIBLE.
2. USED ON 92-9A ONLY.

BOONTON ELECTRONICS CORPORATION

MODEL 92-8A, 92-9A
Schematic, Serial/Parallel
BCD Converter

D830650C

A1 SERIES/PARALLEL OUTPUT BUFFER P.C. BOARD

J 801 CONNECTS TO
P 801 ON
SERIAL/PARALLEL BCD
CONVERTER P.C. BOARD
NO. 565925
SCHEMATIC 830650

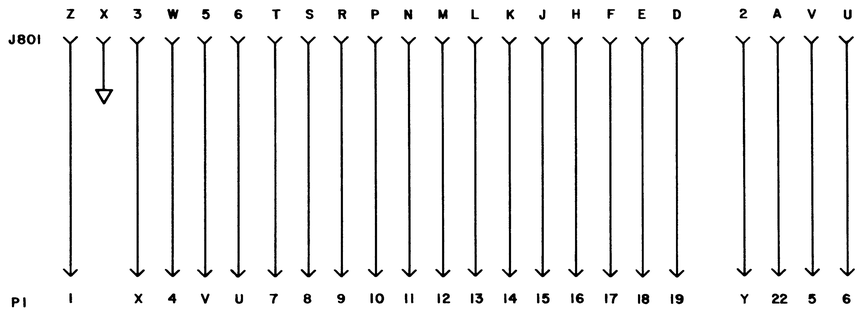

PIN ASSIGNMENTS

P1									
	42BD	42CD	92BD	72BD		42BD	42CD	92BD	72BD
1				HI TERM BIAS ±	A	1			
2	-dBm			LO TERM BIAS ±	B	2	MSD		
3	LOGIC GROUND				C	4			
4	ANALOG OUTPUT				D	8			
5	COMMON				E	1			
6	AUTO ENABLE				F	2			
7	MANUAL DISABLE				H	4	BCD		
8	dBm ENABLE				J	8	ENCODED		
9			3000mV		K	1	DATA		
10	10mW	100mW	1000mV	2000pF	L	2			
11	1mW	10mW	300mV		M	4			
12	100μW	1mW	100mV	200pF	N	8			
13	10μW	100μW	30mV		P	1			
14	1μW	10μW	10mV	20pF	R	2	LSD		
15	100nW	1nW	3mV		S	4			
16	10nW	100nW	1mV	2pF	T	8			
17	4	RANGE CODE		2	U				
18	2			1	V	TRIGGER			
19	1				W	COMPLETE	ENCODE		
20	UNDERRANGE "NOT"				X	HOLD			
21	OVERRANGE "NOT"				Y				
22	PWR MODE		mV MODE	POLARITY	Z				

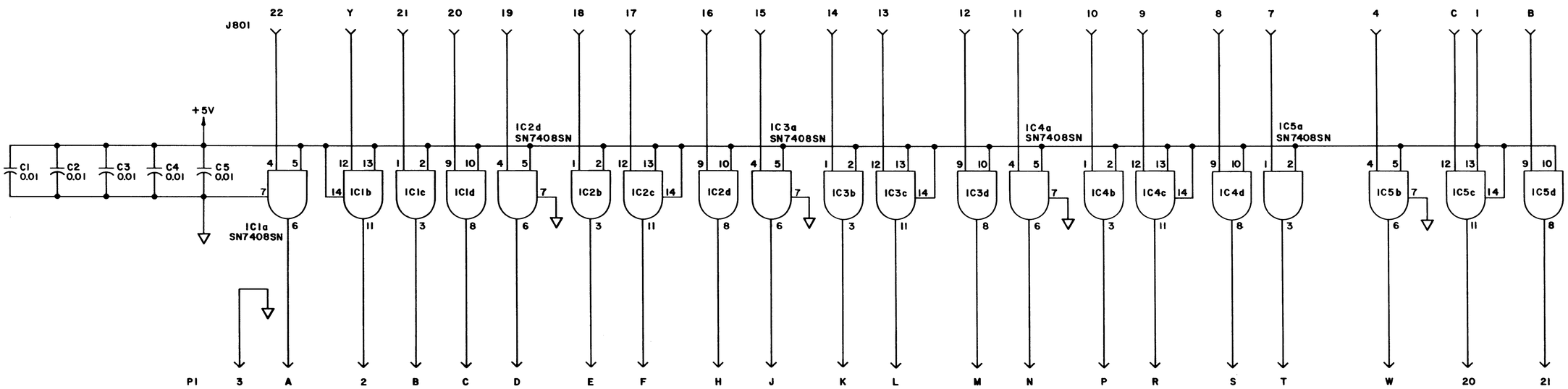

NOTES:

1. CAPACITANCE VALUES IN μF.
2. ⏚ COMMON
3. LAST NUMBERS USED:
   C5 IC5

BOONTON ELECTRONICS CORPORATION

MODEL 92-9A
Schematic, Series/Parallel
Output Buffer P.C. Bd.
E830900A

WARRANTY

Boonton Electronics Corporation warrants its products to the original purchaser to be free from defects in material and workmanship and to operate within applicable specifications for a period of one year from date of shipment, provided they are used under normal operating conditions. This warranty does not apply to active devices that have given normal service, to sealed assemblies which have been opened or to any item which has been repaired or altered without our authorization.

We will repair, or at our option, replace any of our products which are found to be defective under the terms of this warranty.

There will be no charge for parts, labor, or forward and return shipment during the first three months of this warranty.

There will be no charge for parts, labor, or return shipment during the fourth through twelfth month of this warranty.

Except for such repair or replacement, we will not be liable for any incidental damages or for any consequential damages, as those terms are defined in Section 2-715 of the Uniform Commercial Code, in connection with products covered by this warranty.

BOONTON

BOONTON ELECTRONICS CORP. ■ RTE. 287 AT SMITH ROAD, PARSIPPANY, N.J. 07054 ■ (201) 887-5110

BOONTON

BOONTON ELECTRONICS CORP.
ROUTE 287 AT SMITH ROAD
PARSIPPANY, N.J. 07054 – U.S.A.
TEL: (201)887-5110
TWX: 710-986-8241