These manuals are available for download and free of charge.

Do not be tricked into paying for a manual that is available here for free.

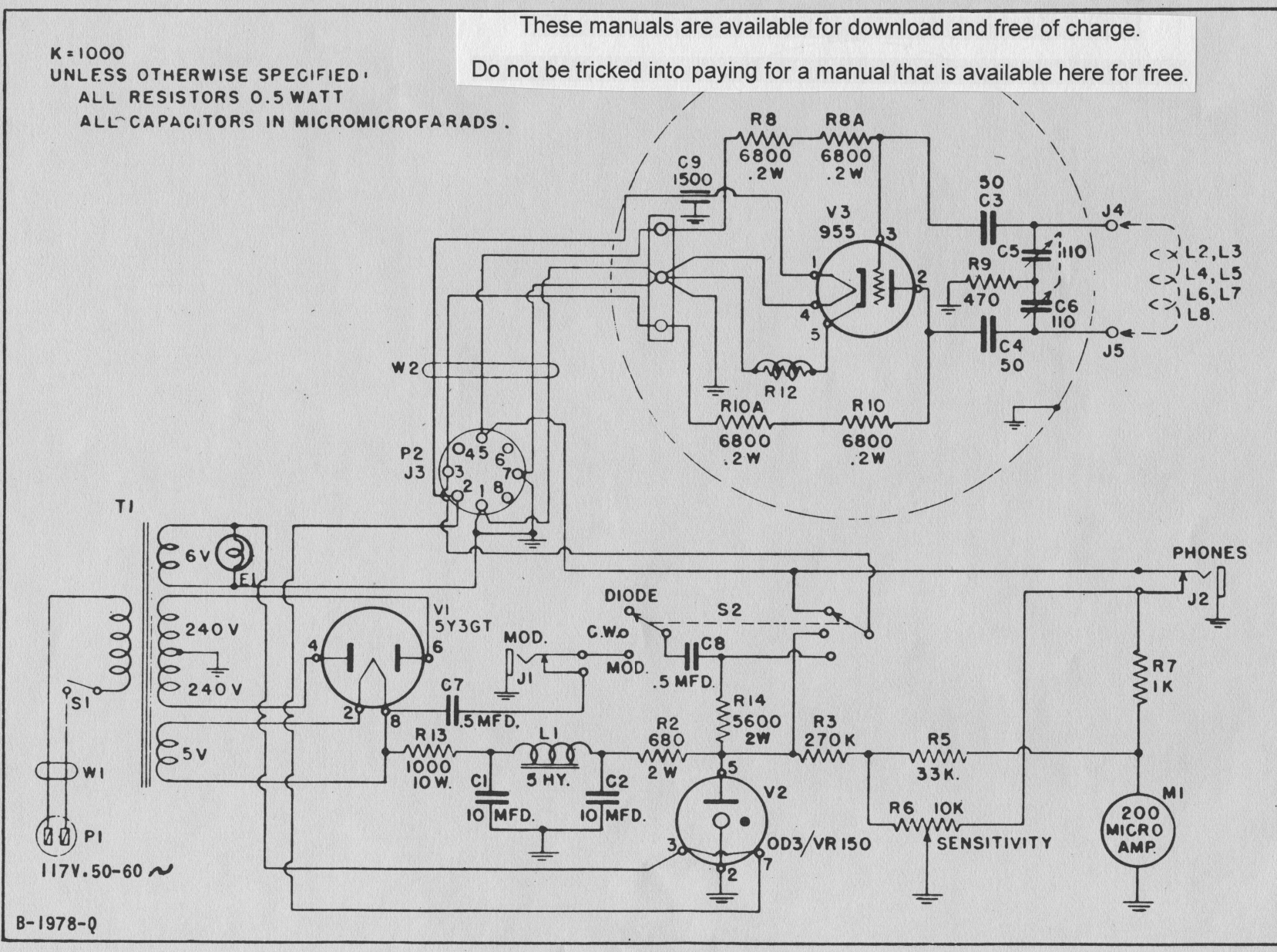

FIG. 17 - SCHEMATIC DIAGRAM